MODEL

SB-200 Linear Amplifier

HEATHKIT®

ASSEMBLY MANUAL

HEATH COMPANY • BENTON HARBOR, MICHIGAN

HEATHKIT®

Copyright ©1964
Heath Company
All rights reserved

595-682-05

PRICE $2.00

Dear Customer:

The Heathkit electronic product you have purchased is one of the best performing electronic products in the world.

Here's how we aim to keep it that way:

Your Heathkit Warranty

During your first 90 days of ownership, any parts which we find are defective, either in materials or workmanship, will be replaced or repaired free of charge. And we'll pay shipping charges to get those parts to you — anywhere in the world.

If we determine a defective part has caused your Heathkit electronic product to need other repair, through no fault of yours, we will service it free — at the factory, at any retail Heathkit Electronic Center, or through any of our authorized overseas distributors.

This protection is exclusively yours as the original purchaser. Naturally, it doesn't cover damage by use of acid-core solder, incorrect assembly, misuse, fire, flood or acts of God. But, it does insure the performance of your Heathkit electronic product anywhere in the world — for most any other reason.

After-Warranty Service

What happens after warranty? We won't let you down. If your Heathkit electronic product needs repairs or you need a part, just write or call the factory, your nearest retail Heathkit Electronic Center, or any Heath authorized overseas distributor. We maintain an inventory of replacement parts for each Heathkit model at most locations — even for many models that no longer appear in our current product line-up. Repair service and technical consultation are available through all locations.

We hope you'll never need our repair or replacement services, but it's nice to know you're protected anyway — and that cheerful help is nearby.

Sincerely,

HEATH COMPANY
Benton Harbor, Michigan 49022

CAUTION

Use extreme care during initial testing and all subsequent operation of this Linear Amplifier. While the SB-200 is designed for maximum safety, never lose respect for the high voltage present in this unit. Protect yourself always against lethal or severe electric shock.

HEATH COMPANY

Assembly
and
Operation
of the

HEATHKIT

LINEAR AMPLIFIER

MODEL SB-200

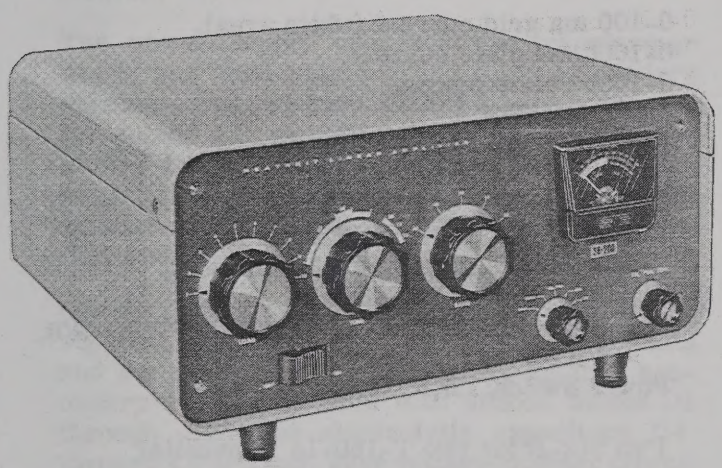

TABLE OF CONTENTS

Specifications. 4

Introduction. 5

Circuit Description. 5

Construction Notes. 7

Parts List. 8

Proper Soldering Techniques. 10

Circuit Board Wiring And Soldering 12

Step-By-Step Procedure 13

Step-By-Step Assembly

- Circuit Board Assembly. 14
- Parts Mounting Chassis. 15
- Parts Mounting - RF Shield. 19
- Wiring RF Shield. 22
- Wiring-Chassis Bottom. 25
- Wiring-SWR Bridge. 30
- Wiring-Chassis Top. 32
- Final Wiring. 36

Initial Test. 42

Final Assembly. 42

Installation. 43

Operation. 47

In Case Of Difficulty. 50

Factory Repair Service 51

Schematic. . . . (fold-out from page). 51

Replacement Parts Price List
(fold-out from page). 52

HEATH COMPANY
BENTON HARBOR, MICHIGAN 49022

SPECIFICATIONS

Band Coverage	80, 40, 20, 15, and 10 meters.
Maximum Power Input	SSB: 1200 watts P.E.P. CW: 1000 watts.
Driving Power Required	100 watts.
Duty Cycle	SSB: continuous voice modulation. CW: 50% (key down time not to exceed 5 minutes).
Third Order Distortion	-30 db or better at 1000 watts P.E.P.
Output Impedance	50 to 75 Ω unbalanced; variable pi-output circuit. SWR not to exceed 2:1.
Input Impedance	52 Ω unbalanced; broad-band pretuned input circuit requires no tuning.
Meter Functions	0-100 ma grid current (white area). 0-1000 ma plate current. 0-1000 relative power. 1:1 to 3:1 SWR. 1500-3000 volts high voltage.
Front Panel Controls	LOAD: 1 to 10. TUNE: 80, 40, 20, 15, and 10 meters. BAND: 80, 40, 20, 15, and 10 meters. RELative Power SENSitivity. Meter Switch: GRID, PLATE, REL PWR, SWR, and HV. Power Switch: OFF, ON.
Tube Complement	Two 572-B (or two T-160-L) in parallel.
Power Requirements	120 volts AC at 16 amperes (maximum). 240 volts AC at 8 amperes (maximum).
Cabinet Size	14-7/8" wide x 6-5/8" high x 13-3/8" deep.
Net Weight	35 lbs.

The Heath Company reserves the right to discontinue instruments and to change specifications at any time without incurring any obligation to incorporate new features in instruments previously sold.

INTRODUCTION

With the increasing popularity of single sideband, suppressed-carrier phone transmission as a mode of amateur radio communication, more Amateurs are finding it possible to run higher transmitter power inputs than they could previously afford with conventional AM equipment. Since high-level modulating equipment is not necessary in single-sideband service, the cost of converting to high power is considerably reduced.

In keeping with this trend toward higher power in single-sideband service, the Heathkit Model SB-200 Linear Amplifier was designed to provide high power capability and complete versatility. Nearly any of the popular SSB and CW exciters available today can be used as a driver for this Amplifier.

The amplifier RF compartment is completely enclosed by perforated aluminum shielding. This type of construction increases stability and greatly decreases radiation that could cause TVI. The Amplifier is forced-air cooled to prolong tube life.

CIRCUIT DESCRIPTION

POWER SUPPLY

The power supply uses a power transformer which has dual-primary and triple-secondary windings. The primary winding may be connected for either 120 or 240 volt AC operation. The blower fan is connected across one-half of the primary winding. The transformer is protected against overload by reset type circuit breakers CB1 and CB2.

One secondary winding of the power transformer supplies 6.3 volts AC for the tube filaments and the pilot lamp in the meter. Another secondary winding is used with silicon diodes D1 through D16 and electrolytic capacitors C4 through C9 in a full-wave voltage-doubler circuit to provide plate voltage for the tubes. Resistors R5 through R10 insure that the voltage across each of the electrolytic capacitors is equalized; these resistors also serve as a bleeder network.

Resistor R11 at the bottom of the bleeder network provides an ALC threshold voltage of approximately 10 volts DC. Resistor R12 provides a means of measuring plate current independently, without also measuring bleeder current.

The third secondary winding, with resistors R1 and R2, capacitor C3, and silicon diode D17 forms a half-wave rectifier circuit. This circuit provides antenna relay control voltage and cut-off bias voltage for the grids of the amplifier tubes.

INPUT CIRCUIT

Tubes V1 and V2 are connected in parallel in a cathode-driven (grounded grid), class B configuration. Driving power for each band is coupled through a broad-band network, consisting of a coil and associated capacitors, and through capacitor C16 to the cathodes of tubes V1 and V2. Coils L1 through L5 with their associated capacitors are used to make up these impedance-matching networks, which reduce distortion and increase efficiency.

The correct input network, as well as the correct output circuit coil tap, for each band is selected with the Band switch. (The coils in the input networks are factory aligned and require no further adjustment.)

To keep the capacitance of the transformer filament winding from shunting the RF driving power to ground, the filament winding is isolated from the cathode circuit by a bifilar-wound filament choke. Also, this choke provides a cathode current path to ground.

OUTPUT CIRCUIT

High voltage is applied to the plates of tubes V1 and V2 through RF choke RFC1 and parasitic chokes PC1 and PC2. Tuning capacitor C25 is connected on the input side of tapped final coils L6 and L7. C26 is switched in parallel with the Tuning capacitor on the 80 meter band.

Loading capacitors C28A and C28B are on the output side of final coils L6 and L7. Capacitor C27 is switched in parallel with the Loading capacitor on the 80 meter band. Output power is applied through antenna change-over relay RL1 and through the SWR (standing wave ratio) bridge circuit to the RF Output connector. The SWR bridge consists of L8, L9, and L10, capacitors C20 and C23, resistors R19 and R20, and crystal diodes CR1 and CR2.

ANTENNA CHANGE-OVER AND CUTOFF BIAS CIRCUITS

Antenna change-over relay RL1 is controlled by a VOX (voice operated transmitter) relay in the exciter used with the Linear Amplifier. The relay in the exciter is connected to the Antenna Relay jack of the Linear Amplifier. When transmitting, the VOX relay grounds the Antenna Relay; when receiving, the Antenna Relay is ungrounded.

While receiving, cut-off bias voltage from the power supply bias circuit is applied through the coil of relay RL1, and through resistor R15 and choke RFC2, to the grids of tubes V1 and V2. The Antenna Relay jack is ungrounded and no current will flow through the coil of relay RL1, which allows the relay to remain open. Thus it connects the RF Output jack (antenna) to the RF Input jack of the Linear Amplifier.

When transmitting, the Antenna Relay jack is grounded by the VOX relay of the exciter. This allows current to flow through the coil of relay RL1 and actuate the relay. When actuated, relay RL1 connects the RF Output jack (antenna) to the output circuit of the Linear Amplifier. Grounding the Antenna Relay jack also grounds the grids of tubes V1 and V2 through RFC2, and resistors R15 and R16. This removes all but -2 volts from the grids of the tubes. This -2 volts is operating bias, which limits resting plate current to approximately 90 milliamperes.

When operating with the Linear Amplifier turned OFF, there is no bias voltage to operate relay RL1 and the RF Input jack remains connected to the antenna, through RF Output jack. This permits low power operation directly from the exciter into the antenna without changing any cables. Because silicon rectifiers and instant-heating-filament tubes are used in the Linear Amplifier, you can go to high power operation as soon as the Linear Amplifier is turned ON.

METERING CIRCUITS

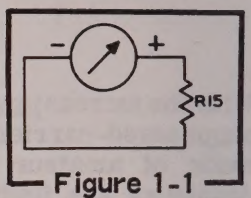

Figure 1-1

GRID - Figure 1-1

In the Grid position of the meter switch, the meter is connected to measure the voltage across grid resistor R15. The voltage across this resistor is directly proportional to the grid current which flows through it; therefore, the meter will indicate grid current. Since grid current in tubes V1 and V2 should not exceed 100 ma, only half (white area) of the 0-200 ma meter scale is used for this measurement.

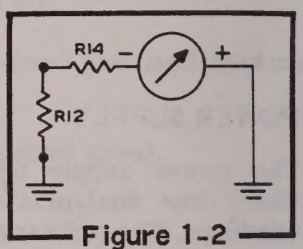

Figure 1-2

PLATE - Figure 1-2

Plate current is read on the top scale of the meter. This scale is divided into 20 ma divisions from 0 to 1000 ma. Plate current readings are obtained by measuring the voltage across resistor R12, through series resistor R14.

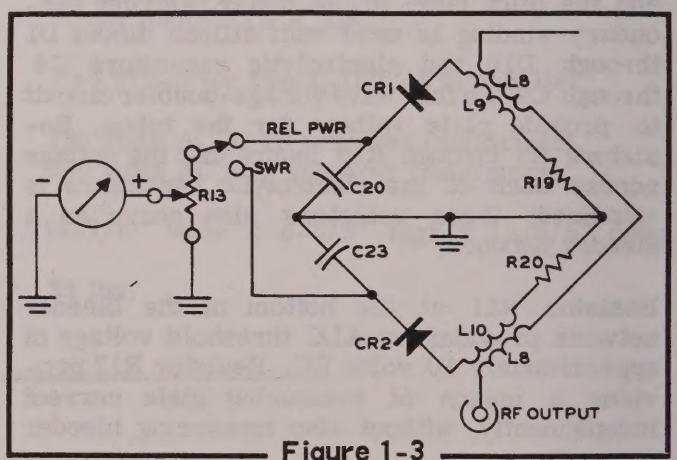

Figure 1-3

REL PWR And SWR - Figure 1-3

Relative Power and Standing Wave Ratio are measured with a bridge circuit, consisting of coils L8, L9, and L10, diodes CR1 and CR2, resistors R19 and R20, and capacitors C20 and

C23. Relative Power Sensitivity control R13 sets the sensitivity of the meter. The REL PWR position is used when adjusting the TUNE and LOAD controls for maximum output of the Linear Amplifier; this meter function is also used to establish a "set" meter level for making SWR measurements.

Because coil L8 of the bridge circuit is connected in series between the RF Input and RF Output jacks when the Linear Amplifier is turned OFF, the meter can be used to measure REL PWR and SWR when operating the exciter alone. This method of checking SWR is recommended for accurately determining antenna performance.

In the bridge circuit, RF current is inductively and capacitively coupled from L8, to L9 and L10. The RF currents in L9 and L10 are rectified by diodes CR1 and CR2, and then filtered by capacitors C20 and C23.

For REL PWR measurements, the rectified RF voltage from L9 is applied to the meter. For SWR (reflected power) measurements, the rectified RF voltage from L10 is applied to the meter.

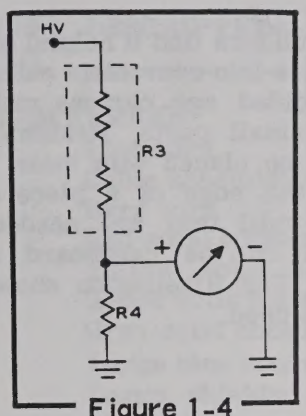

Figure 1-4

HV - Figure 1-4

High Voltage is measured with a voltage divider network consisting of resistors R3 and R4. The voltage across resistor R4 is applied to the meter. High voltage is read on the lower right-hand meter scale (1500 to 3000).

CONSTRUCTION NOTES

This manual is supplied to assist you in every way to complete your kit with the least possible chance for error. The arrangement shown is the result of extensive experimentation and trial. If followed carefully, the result will be highly stable and dependable performance. We suggest that you retain the manual in your files for future reference, both in the use of the equipment and for its maintenance.

UNPACK THE KIT CAREFULLY AND CHECK EACH PART AGAINST THE PARTS LIST. In so doing, you will become acquainted with the parts. Refer to the information on the inside covers of the manual to help you identify the components. If some shortage or parts damage is found in checking the Parts List, please read the Replacements section and supply the information called for therein.

Resistors generally have a tolerance rating of 10% unless otherwise stated in the Parts List. Tolerances on capacitors are generally even greater. Limits of +100% and -20% are common for electrolytic capacitors.

We suggest that you do the following before work is started:

1. Lay out all parts so that they are readily available.
2. Provide yourself with good quality tools. Basic tool requirements consist of a screwdriver with a 1/4" blade; a small screwdriver with a 1/8" blade; phillips screwdriver; long-nose pliers; wire cutters, preferably separate diagonal cutters; a penknife or a tool for stripping insulation from wires; a soldering iron (or gun) and rosin core solder. A set of nut drivers and a nut starter, while not necessary, will aid extensively in construction of the kit.

Most kit builders find it helpful to separate the various parts into convenient categories. Muffin tins or molded egg cartons make convenient trays for small parts. Resistors and capacitors may be placed with their lead ends inserted in the edge of a piece of corrugated cardboard until they are needed. Values can be written on the cardboard next to each component. The illustration shows one method that may be used.

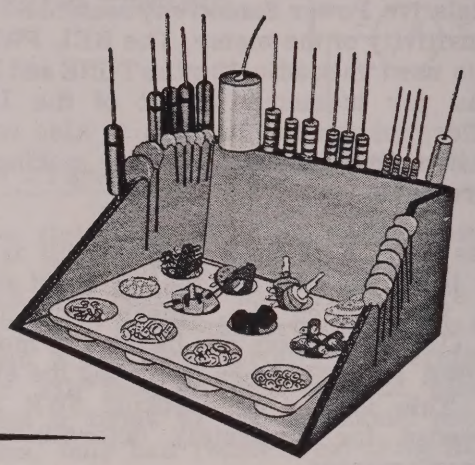

PARTS LIST

The numbers in parenthese in the Parts List are Keyed to the numbers on the Parts Pictorial to aid in parts identification.

To order replacement parts, refer to the "Replacement Parts Price List" and use the Parts Order Form furnished with this kit.

	PART No.	PARTS Per Kit	DESCRIPTION
	RESISTORS		
	1/2 WATT		
(1)	1-140	1	1.5 Ω (brown-green-gold-silver)
	1-3	2	100 Ω (brown-black-brown)
	1-16	2	4700 Ω (yellow-violet-red)
	1-21	1	15 KΩ (brown-green-orange)
	2-121	1	3600 Ω precision
	1 WATT		
(2)	1-14-1	3	33 Ω (orange-orange-black)
	1-3-1	1	3300 Ω (orange-orange-red)
	1-38-1	3	4.7 megohm (yellow-violet-green)
	OTHER RESISTORS		
(3)	1-3-2	1	10 KΩ 2 watt (brown-black-orange)
(4)	3-25-5	1	1 Ω 5 watt
	3-12-7	1	700 Ω 7 watt
	3-14-7	1	2000 Ω 7 watt
	5-2-7	6	30 KΩ 7 watt
(5)	3-2-17	1	465 Ω 15 watt
	CAPACITORS		
(6)	20-40	1	470 μμf silver mica
	20-123	1	500 μμf 2 KV silver mica (.0005)
	20-42	1	510 μμf silver mica

	PART No.	PARTS Per Kit	DESCRIPTION
	CAPACITORS (Cont'd.)		
(7)	20-76	1	68 μμf mica
	20-110	1	75 μμf mica
	20-108	3	200 μμf mica
	20-112	1	310 μμf mica
	20-131	1	360 μμf mica
(8)	21-78	1	5 μμf disc
	21-60	1	18 μμf disc
	21-72	2	.005 μfd 1.4 KV disc
	21-90	1	.001 μfd 3 KV disc
	21-31	12	.02 μfd disc
(9)	21-109	1	100 μμf 5 KV tubular ceramic
	21-165	1	1000 μμf 6 KV tubular ceramic
(10)	25-39	1	2 μfd 150 V electrolytic
	25-19	1	20 μfd 150 V electrolytic
(11)	25-34	6	125 μfd 450 V electrolytic
	26-96	1	150 μμf, 3 KV, variable
	26-97	1	874.8 μμf variable, 2-section
	CONTROLS-SWITCHES		
(12)	10-12	1	100 KΩ control
(13)	61-14	1	DPST rocker switch
	63-351	1	3-wafer rotary switch
	63-352	1	1-wafer rotary switch
(14)	65-15	2	8 ampere circuit breaker
	69-5	1	DPDT 110 V AC relay

PART No.	PARTS Per Kit	DESCRIPTION
COILS-CHOKES-TRANSFORMERS		
(15) 40-98	1	RF driver element
(16) 40-99	2	RF pickup element
(17) 40-591	1	80 meter input coil
40-592	1	40 meter input coil
40-593	1	20 meter input coil
40-727	1	15 meter input coil
40-728	1	10 meter input coil
(18) 40-596	1	10 and 15 meter final coil
(19) 40-597	1	20, 40, and 80 meter final coil
(20) 45-4	1	1.1 mh RF choke
(21) 45-60	1	10 μh RF choke
(22) 45-18	1	28 μh RF choke
(23) 45-61	1	50 μh RF choke
(24) 45-53	2	Parasitic RF choke
54-151	1	Power transformer
DIODES-TUBES		
(25) 56-26	2	1N191 crystal diode (brown-white-brown)
(26) 56-24	1	IN458 silicon diode (yellow-green-gray)
(27) 57-27	17	Silicon diode
411-198	2	572-B tube or T160-L
INSULATORS-GROMMETS-TERMINAL STRIPS-SOCKETS		
(28) 71-5	1	Ceramic standoff insulator with 6-32 stud
73-4	2	5/16" grommet
73-1	2	3/8" grommet
73-3	1	1/2" grommet
(29) 75-29	1	Line cord strain relief
(30) 431-50	1	1-lug terminal strip
(31) 431-16	1	2-lug terminal strip
431-10	2	3-lug terminal strip
431-11	1	5-lug terminal strip
431-45	2	6-lug terminal strip
431-13	1	Screw type terminal strip
(32) 434-9	2	4-lug tube socket
(33) 434-42	3	Phono socket
(34) 436-5	1	Coaxial socket
(35) 438-9	1	Coaxial plug
(36) 438-12	1	Coaxial plug insert
(37) 438-4	3	Phono plug

PART No.	PARTS Per Kit	DESCRIPTION
WIRE-CABLE-SLEEVING		
89-22	1	Line cord
134-107	1	Cable assembly
340-1	1	Bare wire
344-52	1	Red solid hookup wire
344-54	1	Yellow solid hookup wire
344-55	1	Green solid hookup wire
344-58	1	Gray solid hookup wire
344-13	1	Large blue hookup wire
343-2	1	Large shielded cable (RG-58 A/U)
343-3	1	Small shielded cable
346-4	1	Small sleeving
346-3	1	Large sleeving
HARDWARE		
SCREWS		
(38) 250-213	6	4-40 x 5/16"
(39) 250-28	1	6-32 x 1/4" setscrew
(40) 250-8	21	#6 x 3/8" sheet metal screw
(41) 250-138	2	6-32 x 3/16" screw
(42) 250-56	37	6-32 x 1/4"
(43) 250-89	21	6-32 x 3/8"
(44) 250-218	4	6-32 x 3/8" phillips head
(45) 250-32	8	6-32 x 3/8" flat head
(46) 250-26	1	6-32 x 5/8"
(47) 250-29	4	6-32 x 3/4"
(48) 250-40	2	6-32 x 1-1/2"
(49) 250-260	2	8-32 x 1/4"
(50) 250-43	8	8-32 x 1/4" setscrew
(51) 250-141	4	10-24 x 1/2"
(52) 250-126	2	10-32 x 1/2"
(53) 250-67	1	10-24 x 1-1/8" phillips head
(54) 251-1	2	6-32 spade bolt
NUTS		
(55) 252-15	6	4-40
(56) 252-3	63	6-32
(57) 252-30	5	10-24
(58) 252-31	1	10-24 wingnut
(59) 252-7	3	Control

PART No.	PARTS Per Kit	DESCRIPTION
WASHERS		
(60) 253-27	2	5/16" flat steel
(61) 253-8	4	7/16" flat brass
(62) 253-60	8	3/8" flat steel
(63) 253-1	2	3/8" fiber flat
(64) 253-3	4	1/2" fiber flat
(65) 253-7	2	1/2" fiber shoulder
(66) 253-10	3	Flat control
(67) 253-19	4	3/4" flat steel
(68) 254-9	6	#4 lockwasher
(69) 254-1	67	#6 lockwasher
(70) 254-3	5	#10 lockwasher
(71) 254-4	3	Control lockwasher
MISCELLANEOUS		
(72) 255-2	1	3/16" spacer
(73) 255-42	4	3/4" phenolic spacer
(74) 255-12	3	Plastic spacer
(75) 255-59	2	Tapered spacer
(76) 259-1	18	#6 solder lug
(77) 259-5	1	#10 solder lug
(78) 259-10	1	Control solder lug
(79) 260-34	2	Anode clip
(80) 435-1	2	Socket ring

PART No.	PARTS Per Kit	DESCRIPTION
METAL PARTS		
(81) 40-100	1	Coaxial cavity
90-341	1	Cabinet
200-403-1	1	Chassis
203-384-1	1	Front panel
(82) 205-492	1	Capacitor mounting bracket
(83) 204-560	2	Angle bracket
(84) 204-611	1	Circuit breaker mounting bracket
206-254	1	RF shield
(85) 206-255	1	Power supply shield
205-438	1	Top plate
MISCELLANEOUS		
85-88-2	1	Circuit board
(86) 261-9	4	Rubber foot
266-21	1	Fan blade
390-147	2	DANGER label
391-31	1	Nameplate
407-103	1	Meter
420-3	1	Motor
(87) 432-27	1	3-prong AC adapter
462-191	2	Small knob
462-210	3	Large knob
	1	Manual (See front cover for part number.)
		Solder

PROPER SOLDERING TECHNIQUES

Only a small percentage of customers find it necessary to return equipment for factory service. By far the largest portion of malfunctions in this equipment are due to poor or improper soldering.

If terminals are bright and clean and free of wax, frayed insulation and other foreign substances, no difficulty will be experienced in soldering. Correctly soldered connections are essential if the performance engineered into a kit is to be fully realized. If you are a beginner with no experience in soldering, a half hour's practice with some odd lengths of wire may be a worthwhile investment.

For most wiring, a 25 to 100 watt iron or its equivalent in a soldering gun is very satisfactory. A lower wattage iron than this may not heat the connection enough to flow the solder smoothly. Keep the iron tip clean by wiping it from time to time with a cloth.

CHASSIS WIRING AND SOLDERING

1. Unless otherwise indicated, all wire used is the type with colored insulation (hookup wire). In preparing a length of hookup wire, 1/4" of insulation should be removed from each end unless directed otherwise in the assembly step.

2. To avoid breaking internal connections when stripping insulation from the leads of transformers or similar components, care should be taken not to pull directly on the lead. Instead, hold the lead with pliers while it is being stripped.

3. Leads on resistors, capacitors, and similar components are generally much longer than need be to make the required connections. In these cases, the leads should be cut to proper length before the part is installed. In general, the leads should be just long enough to reach their terminating points.

4. Wherever there is a possibility of bare leads shorting to other parts or to the chassis, the leads should be covered with insulating sleeving. Where the use of sleeving is specifically intended, the phrase "use sleeving" is included in the associated assembly step. In any case where there is the possibility of an unintentional short circuit, sleeving should be used. Extra sleeving is provided for this purpose.

5. Crimp or bend the lead (or leads) around the terminal to form a good joint without relying on solder for physical strength. If the lead is too large to allow bending or if the step states that it is not to be crimped, position it so that a good solder connection can still be made.

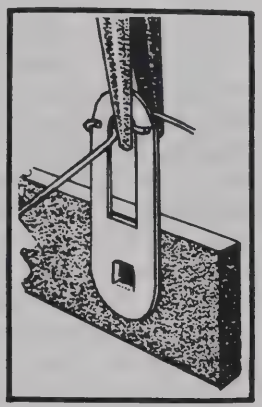

6. Position the work, if possible, so that gravity will help to keep the solder where you want it.

7. Place a flat side of the soldering iron tip against the joint to be soldered until it is heated sufficiently to melt the solder.

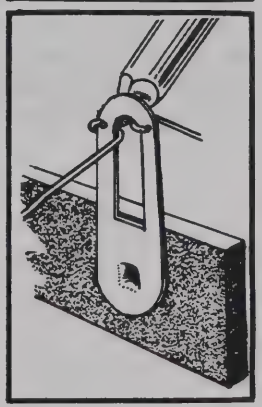

8. Then place the solder against the connection and it will immediately flow over the joint; use only enough solder to thoroughly wet the junction. It is usually not necessary to fill the entire terminal with solder.

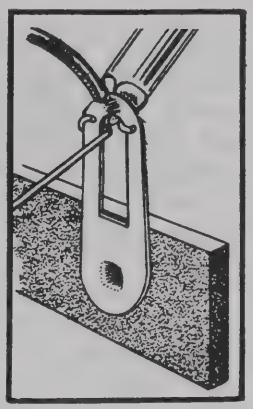

9. Remove the solder and then the iron from the completed joint. Use care not to move the leads until the solder is solidified.

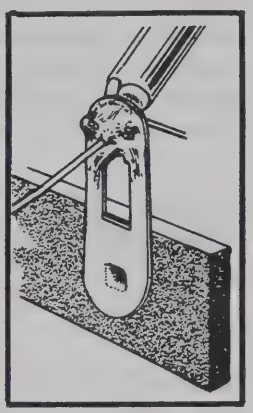

A poor or cold solder joint will usually look crystalline and have a grainy texture, or the solder will stand up in a blob and will not have adhered to the joint. Such joints should be reheated until the solder flows smoothly. In some cases, it may be necessary to add a little more solder to achieve a smooth, bright appearance.

ROSIN CORE SOLDER HAS BEEN SUPPLIED WITH THIS KIT. THIS TYPE OF SOLDER MUST BE USED FOR ALL SOLDERING IN THIS KIT. ALL GUARANTEES ARE VOIDED AND WE WILL NOT REPAIR OR SERVICE EQUIPMENT IN WHICH ACID CORE SOLDER OR PASTE FLUXES HAVE BEEN USED. IF ADDITIONAL SOLDER IS NEEDED, BE SURE TO PURCHASE ROSIN CORE (60:40 or 50:50 TIN-LEAD CONTENT) RADIO TYPE SOLDER.

CIRCUIT BOARD WIRING AND SOLDERING

Before attempting any work on the circuit board, read the following instructions carefully and study the Figures. It is only necessary to observe the following basic precautions to insure proper operation of the unit the first time it is turned on.

Proper mounting of components on the board is essential for good performance. A good general rule to follow is that all components on the board should be mounted tightly to the board, unless instructions state otherwise. All leads should be kept as short as possible to minimize the effects of stray capacity in the wiring. Proper and improper methods of mounting are illustrated in the accompanying Figures.

NOTE: Exercise care not to damage resistors or capacitors when bending the leads as shown.

Tubular capacitors and resistors will fit properly if the leads are bent as shown. Components with lugs normally require no preparation unless the lugs appear to be bent, in which case they can be straightened with pliers.

Parts should be inserted as instructed, and the leads bent outward, as illustrated, to lock them in place. After the part is in position, cut the leads off about 1/4" from the board. When a group of parts have been installed on a circuit board, solder each lead to the foil pattern and clip off the excess wire.

The actual technique of soldering leads to a circuit board is quite simple. Position the tip of the soldering iron so that it firmly contacts both the circuit board foil and the wire or lug to be soldered, as shown. The iron should be held so that solder is not likely to flow to adjacent foil conductors or connections. The solder should immediately be placed between the iron and the joint to be soldered. Remove the length of solder as soon as its end begins to melt and flow onto the lead and foil. Hold the tip of the iron in place only until the solder begins to flow outward over the foil; then remove the iron quickly.

Avoid overheating the connection. A soldering pencil or small iron (approximately 25 watts) is ideal for use in circuit board work. If only a high wattage iron or soldering gun is available, precautions must be taken to avoid circuit board damage due to overheating and excess solder.

The use of excessive amount of solder will increase the possibility of bridging between foil conductors or plugging holes which are to be left open for wires which may be added later on. If solder is accidentally bridged across insulating areas between conductors, it can be cleaned off by heating the connection carefully and quickly wiping or brushing the solder away with a soft cloth or clean brush. Holes which become plugged can be cleared by heating the area immediately over the hole while gently pushing the lead of a resistor through the hole from the opposite side, and withdrawing the lead before the solder rehardens. Do not force the lead through; too much pressure before the solder has time to soften may separate the foil from the board.

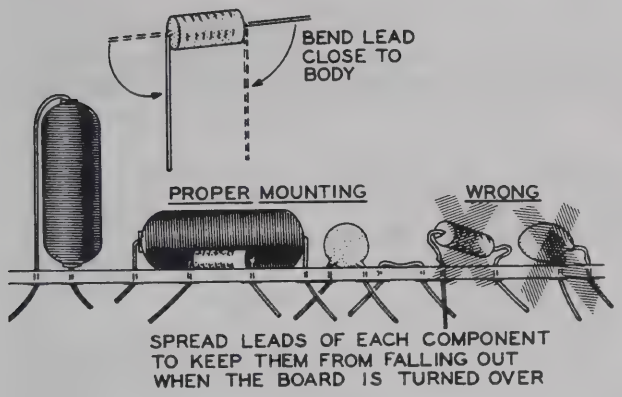
BEND LEAD CLOSE TO BODY
PROPER MOUNTING
WRONG
SPREAD LEADS OF EACH COMPONENT TO KEEP THEM FROM FALLING OUT WHEN THE BOARD IS TURNED OVER

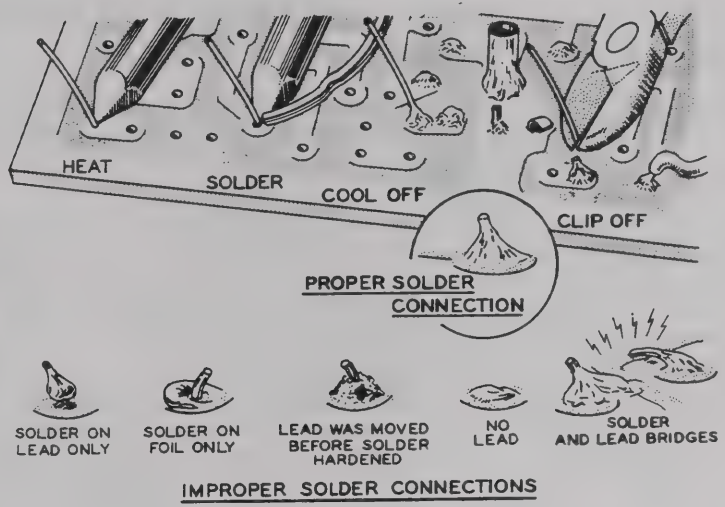

STEP-BY-STEP PROCEDURE

The following instructions are presented in a logical step-by-step sequence to enable you to complete your kit with the least possible confusion. Be sure to read each step all the way through before beginning the specified operation. Also read several steps ahead of the actual step being performed. This will familiarize you with the relationship of the subsequent operations. When the step is completed, check it off in the space provided. This is particularly important as it may prevent errors or omissions, especially if your work is interrupted. Some kit builders have also found it helpful to mark each wire and part in colored pencil on the Pictorial as it is added.

ILLUSTRATIONS

The fold-out diagrams in this manual may be removed and attached to the wall above your working area; but because they are an integral part of the instructions, they should be returned to the manual after the kit is completed. In general, the illustrations in this manual correspond to the actual configuration of the kit; however, in some instances the illustrations may be slightly distorted to facilitate clearly showing all of the parts.

SOLDERING

The abbreviation "NS" indicates that a connection should not be soldered yet as other wires will be added. When the last wire is installed, the terminal should be soldered and the abbreviation "S" is used to indicate this. Note that a number will appear after each solder instruction. This number indicates the number of leads that are supposed to be connected to the terminal in point before it is soldered. For example, if the instruction reads, "Connect a wire to lug 1 (S-2)," it will be understood that there will be two wires connected to the terminal at the time it is soldered. (In cases where a wire passes through a terminal or lug and then connects to another point, it will count as two wires, one entering and one leaving the terminal.)

STEP-BY-STEP ASSEMBLY

CIRCUIT BOARD ASSEMBLY

( ) Locate the circuit board and position it as shown in Pictorial 1; then complete the steps around this Pictorial. Be sure to read Page 12 of the manual before beginning assembly of the kit.

START

( ) Install sixteen silicon diodes. Position the cathode end of each diode as shown. Solder and cut off the excess leads except the indicated lead of the first diode.

NOTE: PLACE SILICON DIODES WITH THE CATHODE END AS DIRECTED. THE CATHODE END MAY BE IDENTIFIED BY A COLOR DOT, COLOR END, OR COLOR BAND.

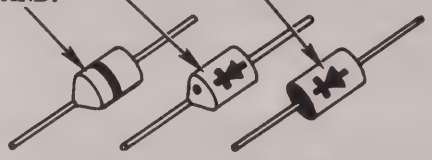

( ) Install the six 30 KΩ (30,000 Ω) 7 watt resistors. Use the 500 μμf (.0005 μfd) silver mica capacitor as a temporary spacer between each resistor and the circuit board. Solder and cut off the excess leads as each resistor is installed. Space these resistors so they do not touch the electrolytic capacitors, the circuit board, or each other.

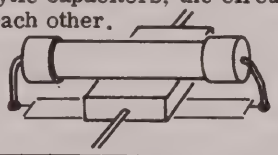

( ) Install the 700 Ω 7 watt resistor, using the 510 μμf silver mica capacitor as a temporary spacer between the resistors and circuit board. Solder and cut off the excess leads.

( ) In a like manner, install the 1 Ω 5 watt precision resistor, using the same capacitor as a spacer. Solder and cut off the excess leads.

( ) Install the 3600 Ω 1/2 watt precision resistor. Solder and cut off the excess leads.

PICTORIAL 1

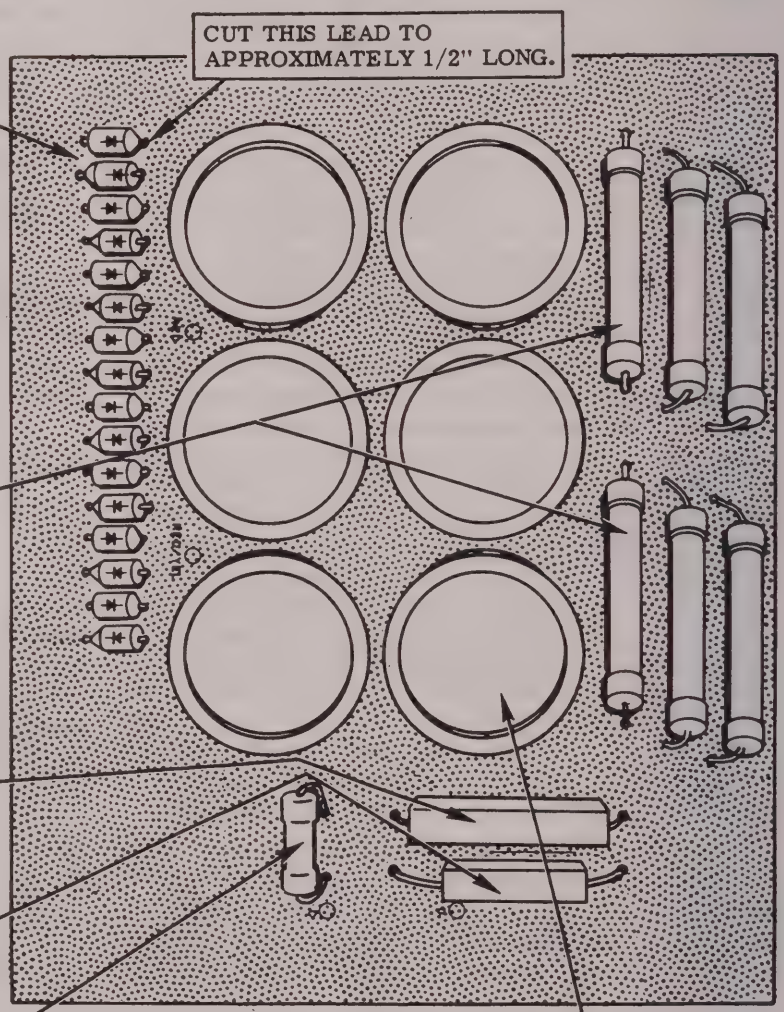

( ) Install the six 125 μfd electrolytic capacitors. Position the center lug in the large center hole and the four other lugs in outside holes in the circuit board for each capacitor. Bend the center lugs over against the foil and twist the outside lugs 1/8 turn. Solder all lugs which extend through foil.

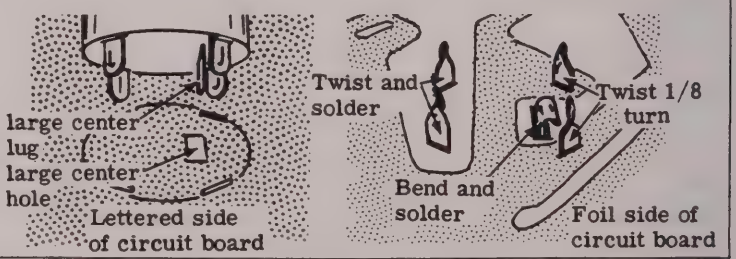

FINISH

PARTS MOUNTING-CHASSIS

Refer to Pictorial 2 (fold-out from page 12) for the following steps.

NOTE: Lockwashers and nuts will be used with all screws in mounting parts, unless stated otherwise in the assembly steps. Consequently, the following steps will call out only the size and type of hardware to be used. For example, the phrase "6-32 x 1/4" hardware" means to use 6-32 x 1/4" screws, #6 lockwashers, and 6-32 nuts.

( ) Refer to Detail 2A and install a phono socket on the rear chassis apron at T. Use 6-32 x 1/4" hardware. Position the phono socket as shown in the Pictorial. Bend lug 2 against the chassis as shown.

( ) Similarly, mount phono sockets at Y and Z, using 6-32 x 1/4" hardware. Do not bend lug 2 of these phono sockets against the chassis.

( ) Referring to Detail 2A, locate the ceramic insulator with the 6-32 stud and cut off the tip as shown.

( ) Mount the ceramic insulator at U. Use a #6 lockwasher and a 6-32 nut.

( ) Referring to Detail 2B, install the 10-24 x 1-1/8" phillips head screw at W. Use #10 lockwashers, a 10-24 nut, 3/4" flat steel washers, and a 10-24 wingnut.

( ) Referring to Detail 2C, install the coaxial socket at X. Use 4-40 x 5/16" hardware in the two holes shown. The remaining hardware for this socket will be installed later.

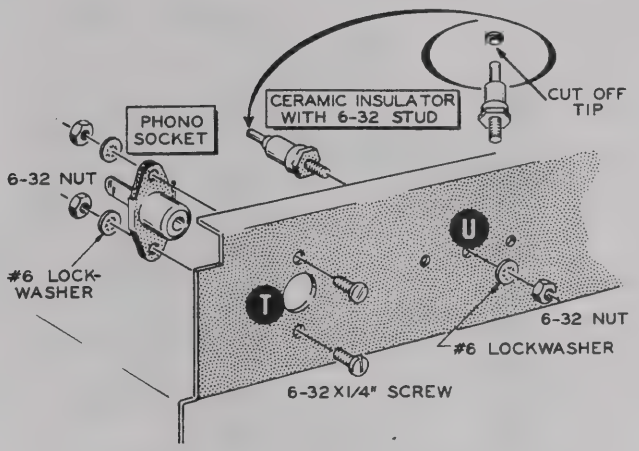

Detail 2A

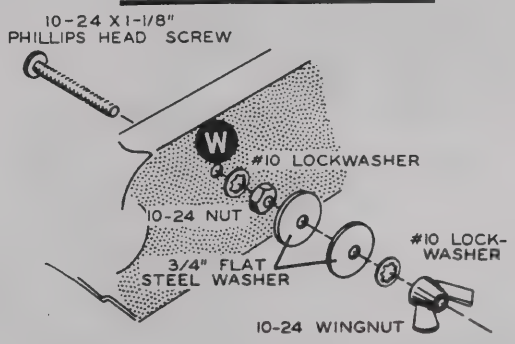

Detail 2B

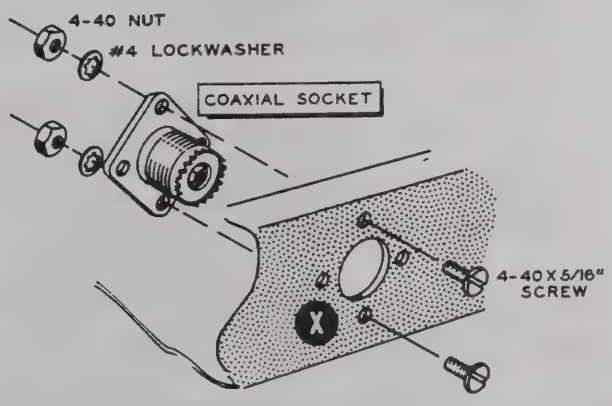

Detail 2C

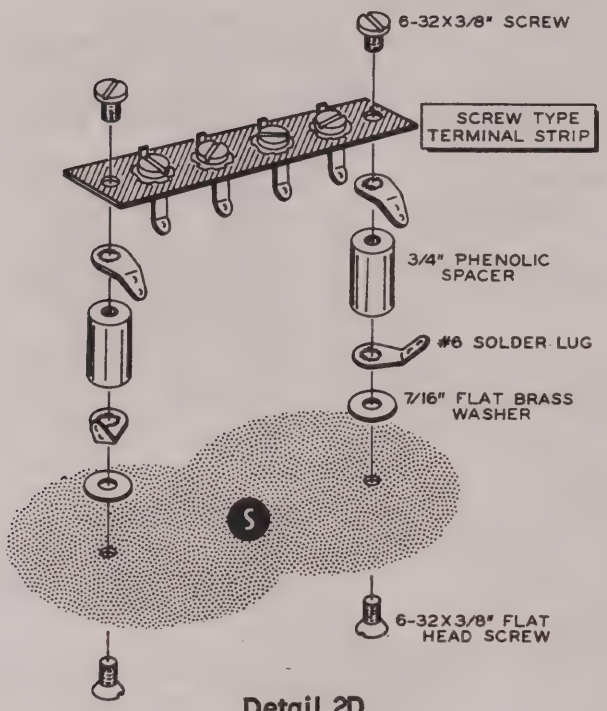

Detail 2D

( ) Refer to Detail 2D and secure two 3/4" phenolic spacers at S. Use #6 solder lugs, 7/16" flat brass washers, and 6-32 x 3/8" flat head screws. Do not overtighten the screws as the spacer threads could be stripped.

( ) Secure the screw type terminal strip to the other end of the phenolic spacers, using #6 solder lugs and 6-32 x 3/8" screws.

( ) Referring to Detail 2E, install the motor to the chassis. Use 3/8" grommets, 7/16" flat brass washers, 1/2" fiber shoulder washers, and 10-32 x 1/2" screws. Position the motor as shown in the Pictorial.

( ) Locate the fan blade and start a 6-32 x 1/4" setscrew into the fan bushing.

( ) Place the fan blade over the motor shaft so the shaft is flush with the edge of the fan blade bushing. Then tighten the setscrew.

( ) Referring to Detail 2F, install the relay (#69-5) at L. Use a 5/16" rubber grommet, three 1/2" fiber flat washers, and a 6-32 x 5/8" screw.

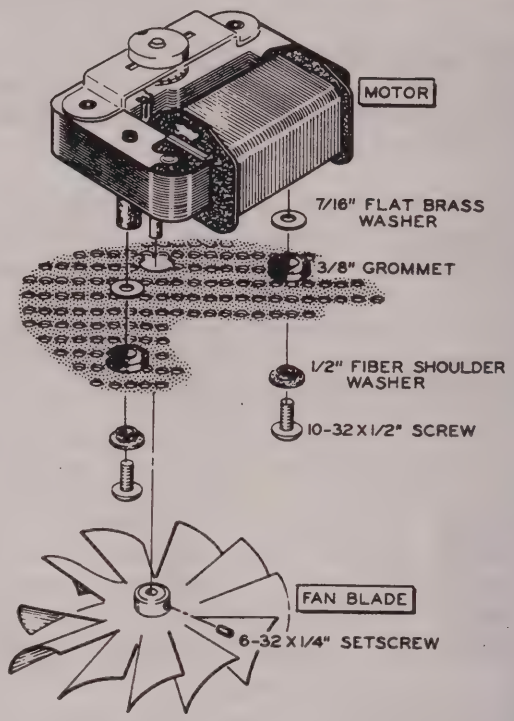

Detail 2E

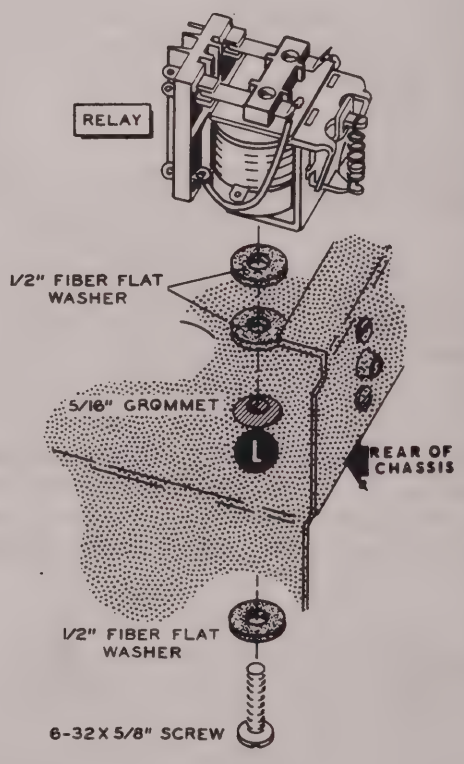

Detail 2F

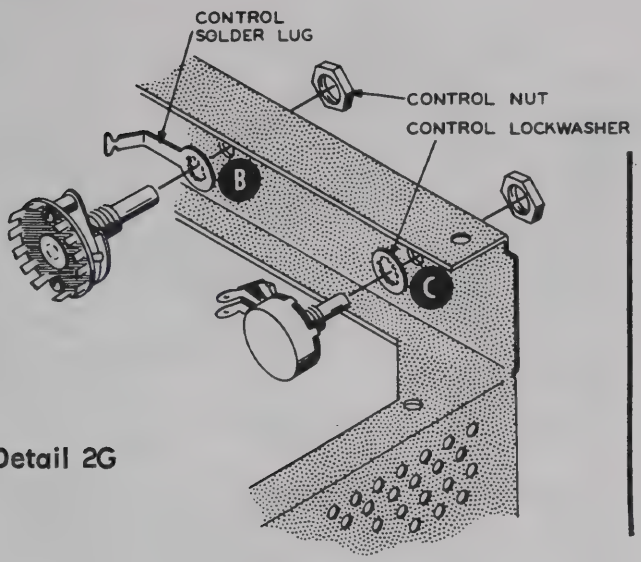

Detail 2G

( ) Refer to Detail 2G and install a 100 KΩ control (#10-12) at C, using a control lockwasher and a control nut. Position the control lugs as shown.

( ) Similarly, install the 1-wafer rotary switch (#63-352) at B. Use a control solder lug and a control nut. Position the switch lugs and solder lug as shown in the inset drawing in Pictorial 2.

NOTE: Be sure to keep the plates of the variable capacitors fully meshed (closed) at all times to prevent damage during handling.

( ) Referring to Detail 2H, install the 2-section variable capacitor (#26-97) on the top of the chassis at D. Use #6 lockwashers, 6-32 nuts and two #6 solder lugs at the locations shown.

( ) Referring to Detail 2J, install the DPST rocker switch at A. Use 6-32 x 3/8" flat head hardware. Be sure to position the switch lugs as shown. Operate the rocker switch to see that it functions properly.

( ) Install a 5/16" rubber grommet at F.

( ) Install a 1/2" rubber grommet at P.

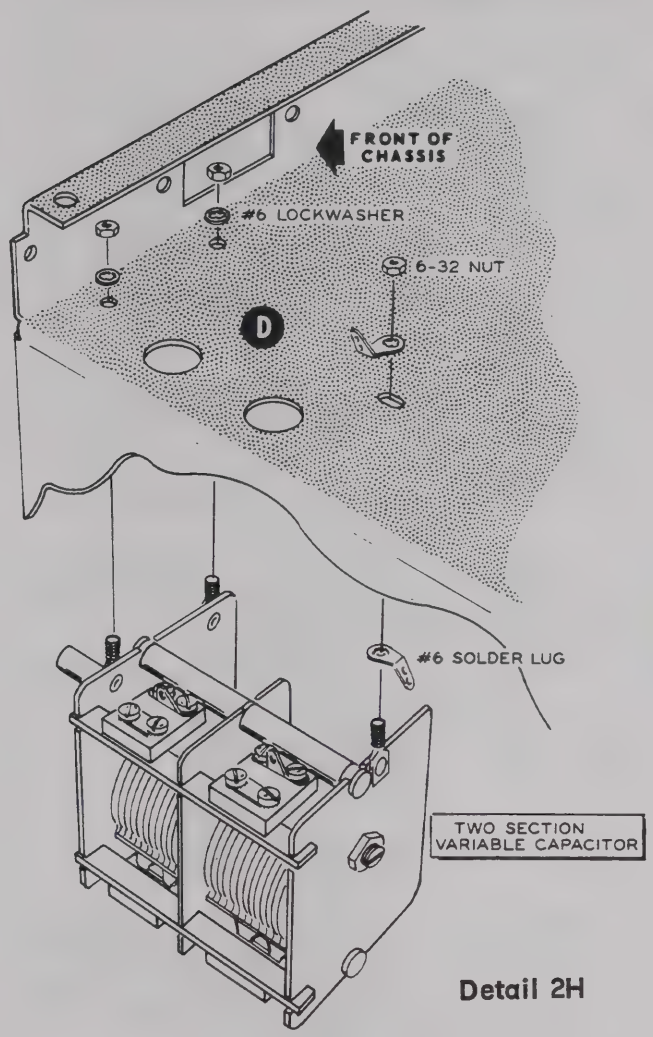

Detail 2H

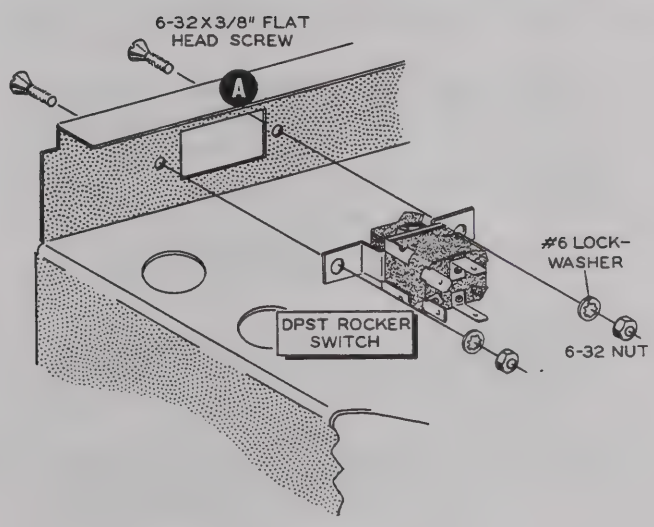

Detail 2J

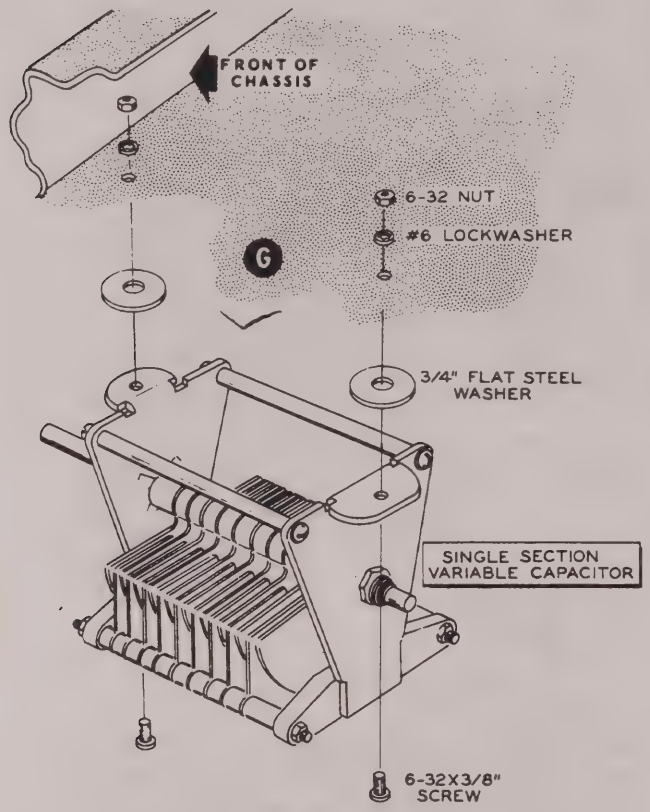

Detail 2K

( ) Install the 1-section variable capacitor (#26-96) on top of the chassis at G. Use 6-32 x 3/8" hardware with two 3/4" flat steel washers as shown in Detail 2K. Position the capacitor as shown.

Refer to Detail 2L for the following steps.

( ) Locate the power transformer and cut the leads to the following lengths. Measure the leads from where they come out of the transformer.

LEAD COLOR	LENGTH
Either green	9-1/2"
Other green	8"
Either blue	7-1/2"
Red-yellow	7"
Black-red	6"

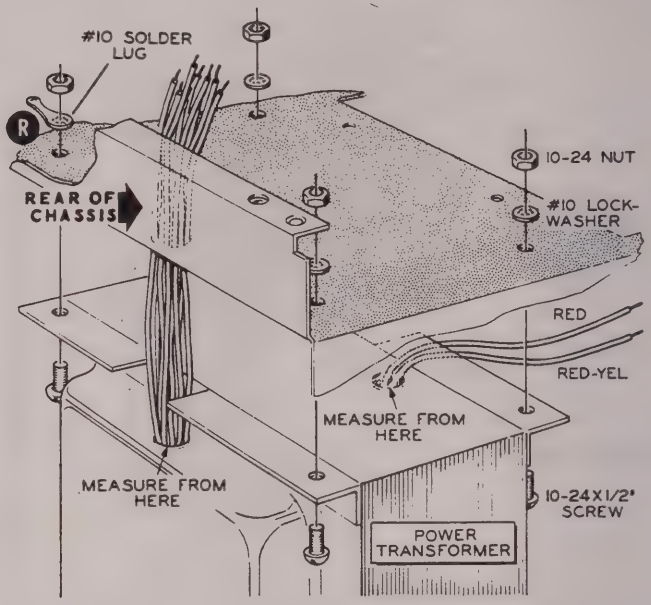

Detail 2L

LEAD COLOR	LENGTH
Black	6-1/2"
Red	5-1/2"
Other blue	3"
Black-green	3"
Black-yellow	3"
Green-yellow	3"

( ) Strip 1/4" insulation from the end of each transformer lead. Melt a small amount of solder on the exposed lead end to hold the small wire strands together.

( ) Position the power transformer as shown. Place the chassis over the top of the transformer with the red and the red-yellow leads toward the front of the chassis and the remaining leads through the large hole in the chassis as shown.

( ) Secure the power transformer to the chassis, using 10-24 x 1/2" hardware with a #10 solder lug at R.

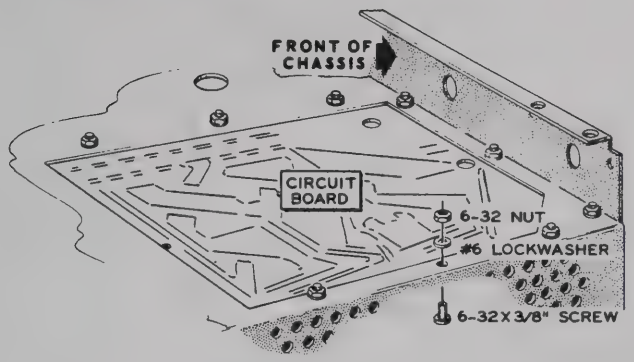

Detail 2M

( ) Referring to Detail 2M, install the circuit board on the top of the chassis, using 6-32 x 3/8" hardware. Be sure to position the circuit board as shown.

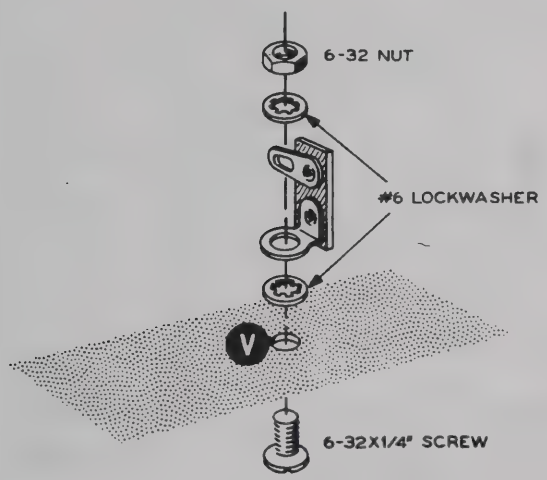

Detail 2N

( ) Referring to Detail 2N, install a 1-lug terminal strip at V, using 6-32 x 1/4" hardware. Position the terminal strip as shown.

Temporarily set the chassis aside.

PARTS MOUNTING-RF SHIELD

Refer to Pictorial 3 (fold-out from Page 21) for the following steps.

( ) Locate the RF shield and position it as shown.

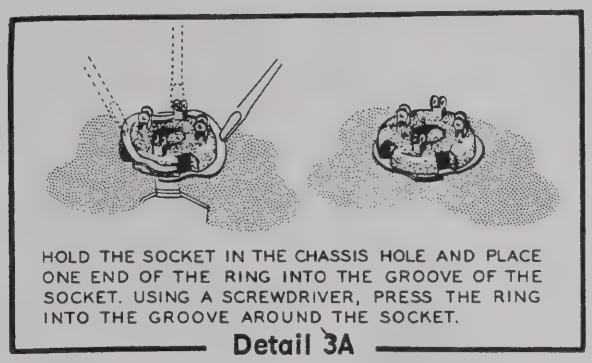
HOLD THE SOCKET IN THE CHASSIS HOLE AND PLACE ONE END OF THE RING INTO THE GROOVE OF THE SOCKET. USING A SCREWDRIVER, PRESS THE RING INTO THE GROOVE AROUND THE SOCKET.

Detail 3A

( ) Referring to Detail 3A, install 4-lug tube sockets at V1 and V2, using socket rings. Place each socket so lug 1 is positioned as shown in the Pictorial.

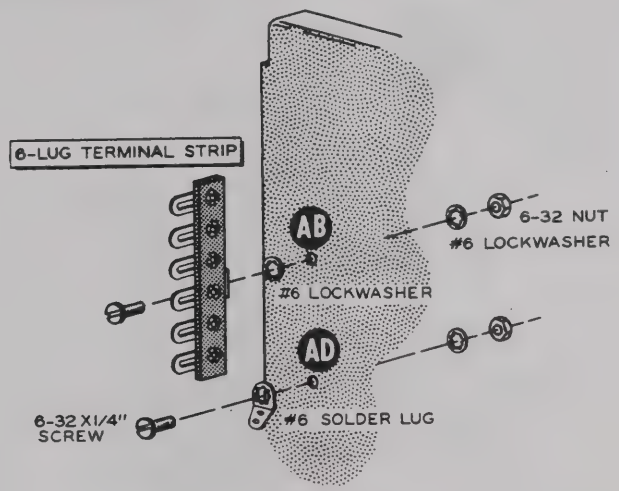

Detail 3B

( ) Refer to Detail 3B and install a 6-lug terminal strip at AB. Use 6-32 x 1/4" hardware.

( ) Install #6 solder lugs at AD and AC, using 6-32 x 1/4" hardware.

( ) Install pairs of #6 solder lugs at AE and AF, using 6-32 x 1/4" hardware. Be sure to position the solder lugs as shown in the Pictorial.

( ) Locate the 3-wafer rotary switch (#63-351) and slide the rear wafer off the switch shaft.

( ) Place a control lockwasher on the knob end of the shaft.

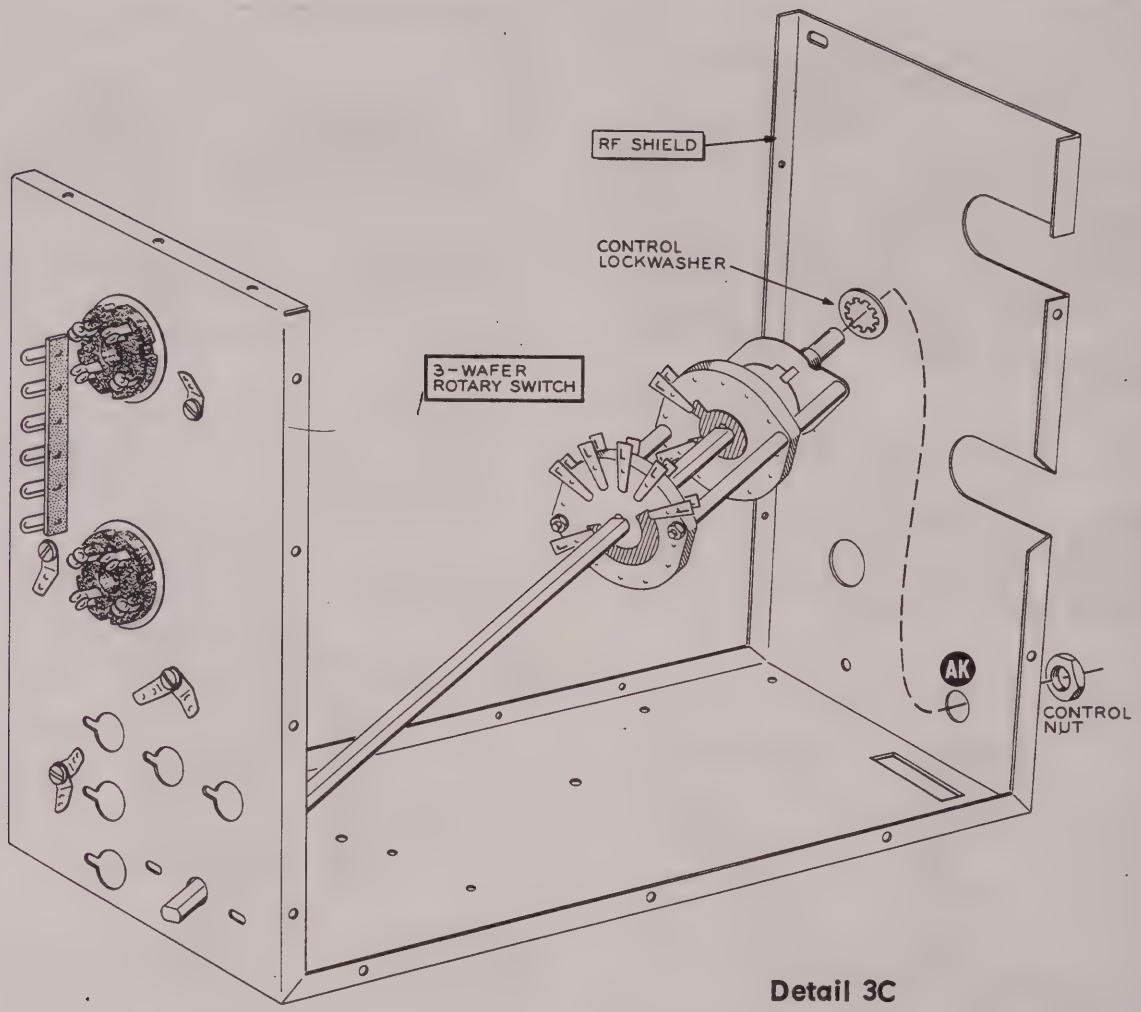

Detail 3C

( ) Referring to Detail 3C, position the switch as shown in the RF shield. Place the shaft through the hole in the rear of the bracket and then position the knob end of the switch through hole AK as shown.

( ) Temporarily secure the switch to the RF shield with a control nut. Do not tighten the control nut at this time.

( ) Turn the shaft of the switch fully counter-clockwise.

( ) Referring to Detail 3D, install the rear wafer of the switch on the bracket by removing one nut and one lockwasher from each mounting screw. This should leave one lockwasher and nut on each mounting screw. Position the movable wiper of this wafer as shown and place a 3/8" flat steel washer on each mounting screw.

( ) Secure the rear wafer of the switch to the RF shield with 3/8" flat steel washers and the switch hardware as shown. Be sure the notch of the rear wafer rotor is aligned with the notch of the rotors of the other two wafers.

( ) Now tighten the control nut securing the switch at AK.

( ) Refer to Detail 3E, and mount a #6 solder lug at AJ on the RF shield with a 6-32 x 1/4" screw and a 6-32 nut. Position the solder lug as shown.

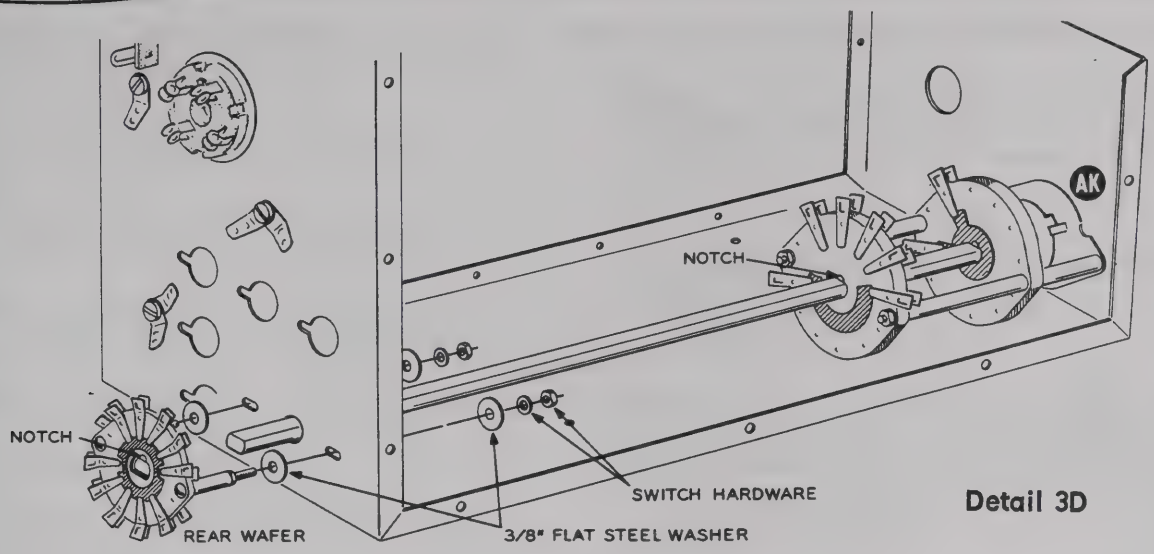

Detail 3D

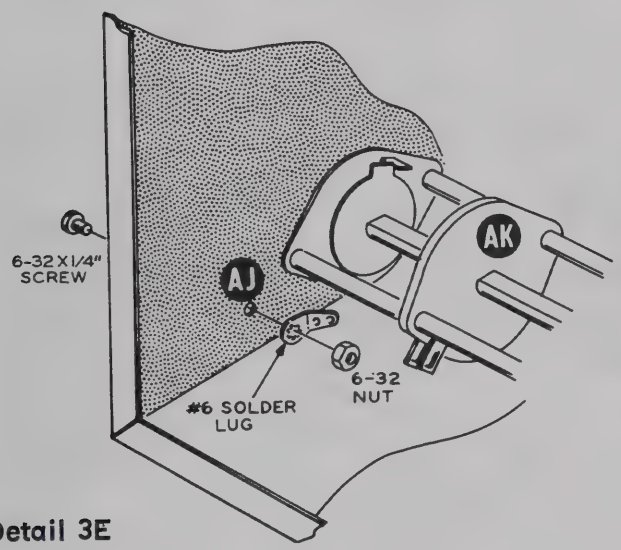

Detail 3E

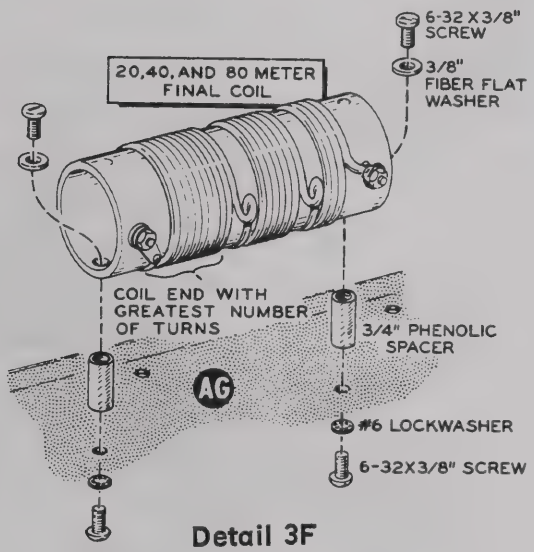

Detail 3F

Refer to Detail 3F for the following steps.

NOTE: Do not overtighten the phenolic spacers in the following steps, as the threads could strip out easily.

( ) Install 3/4" phenolic spacers to the indicated side of the 20, 40, and 80 meter final coil (#40-597). Use 6-32 x 3/8" screws and 3/8" fiber flat washers as shown.

( ) Now mount this final coil to the RF shield bracket at AG, using 6-32 x 3/8" screws and #6 lockwashers. Be sure to position the end with the most turns toward tube sockets V1 and V2.

( ) Referring to Detail 3G, install the circuit breaker mounting bracket on the RF shield, using 6-32 x 1/4" hardware with a #6 solder lug at AH.

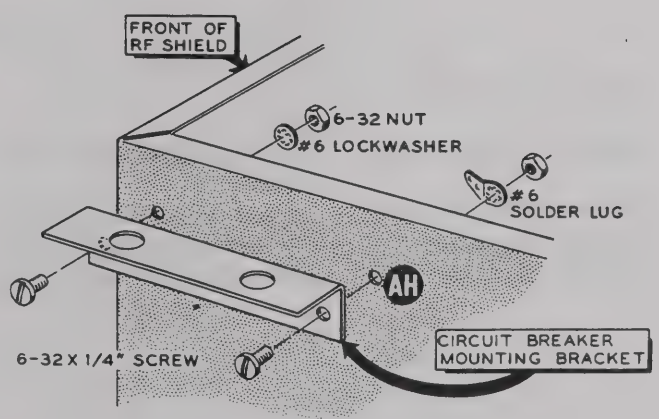

Detail 3G

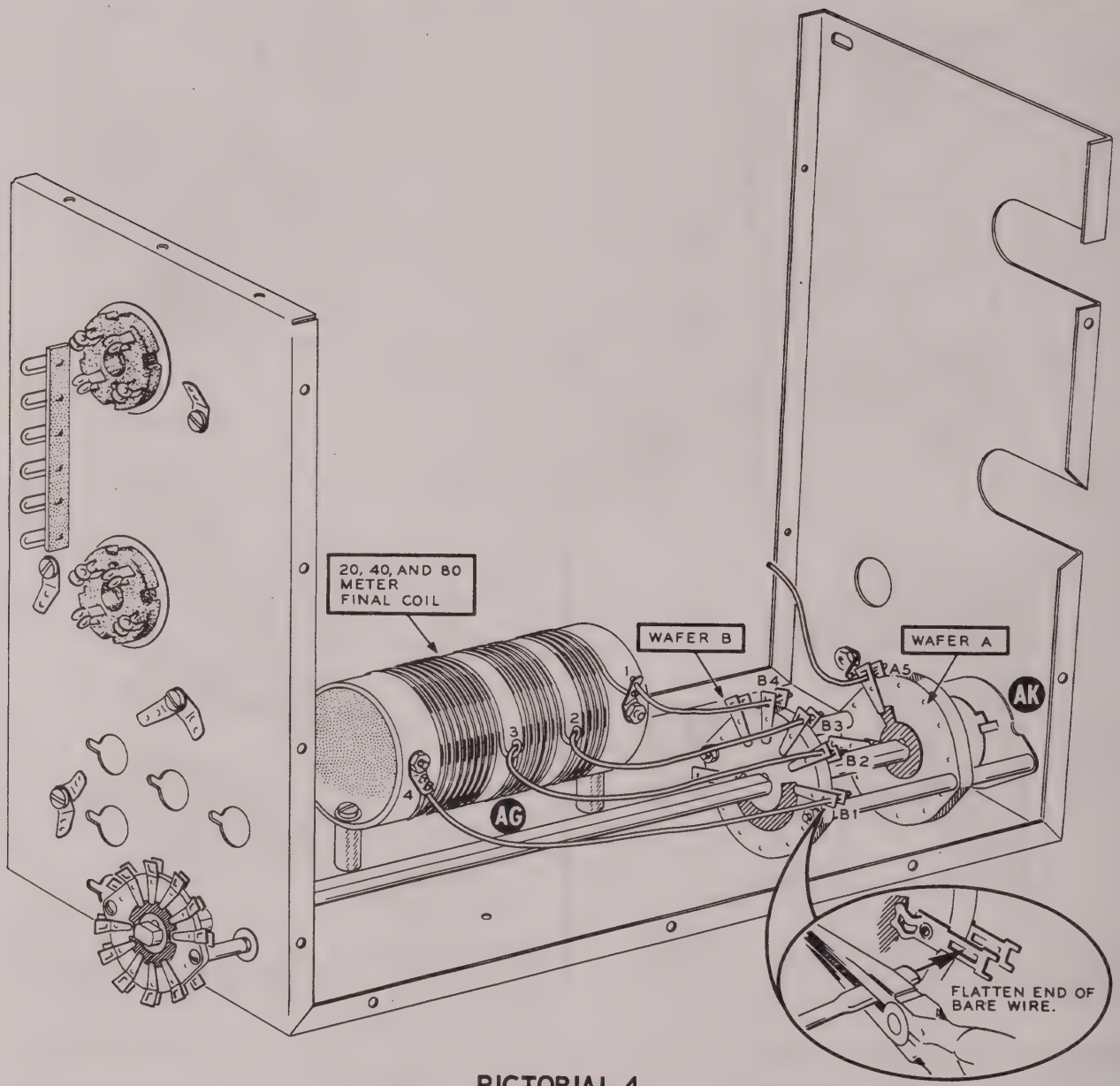

PICTORIAL 4

WIRING-RF SHIELD

Refer to Pictorial 4 for the following steps.

NOTE: The bare wire is too large to fit into the switch lugs. Therefore the end going to the switch lugs should be flattened as shown in the inset drawing of the Pictorial. Pass the wire through both lugs at each position on the switch. Do not attempt to bend this wire around the coil or switch lugs as the coil or switch could be damaged. When soldering connections at switch AK, be sure to solder both lugs at each connection.

( ) Connect a 2" bare wire from lug 1 of coil AG (S-1) to lugs B4 of switch AK (NS).

( ) Connect a 3" bare wire from lug 2 of coil AG (S-1) to lugs B3 of switch AK (S-1).

( ) Connect a 4-1/4" bare wire from lug 3 of coil AG (S-1) to lugs B2 of switch AK (S-1).

( ) Connect a 5-1/2" bare wire from lug 4 of coil AG (S-1) to lugs B1 of switch AK (NS).

( ) Connect one end of a 2" bare wire to lugs A5 of switch AK (S-1). The other end will be connected later.

Refer to Detail 4A for the following steps.

( ) Connect a 1-1/2" bare wire from solder lug AJ (S-1) to lugs A7 of switch AK (S-1).

( ) Connect a 500 $\mu\mu$f (.0005) 2 KV silver mica capacitor from solder lug AH (S-1) to lugs B7 of switch AK (S-1).

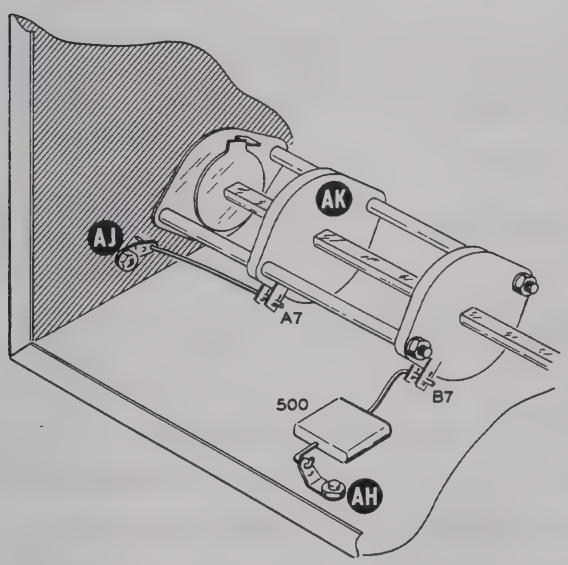

Detail 4A

Refer to Detail 4B for the following steps.

( ) Locate the 10 and 15 meter final coil (#40-596). Pass the center wire of this coil through lugs B5 of switch AK (NS).

( ) Position a tapered spacer between the RF shield and the coil.

( ) Position the end of the coil, opposite the solder lug, between lugs B4 of switch AK (S-2). It may be necessary to reshape the center wire to make the coil end fit properly between the switch lugs.

( ) Now solder lugs B5 of switch AK (S-1). Cut off any excess from the center wire.

( ) Remove the tapered spacer.

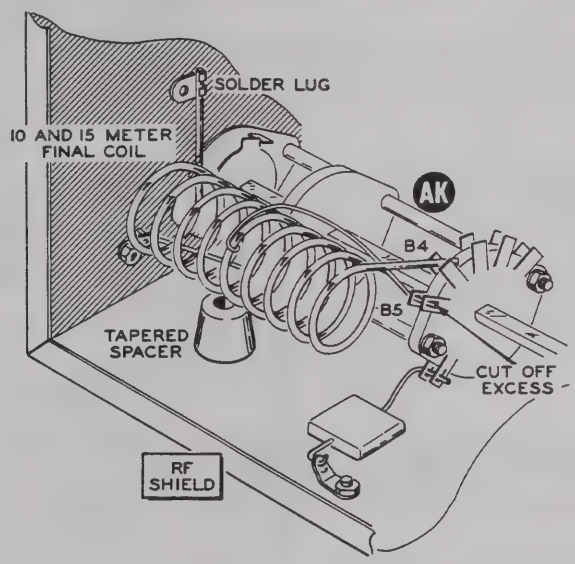

Detail 4B

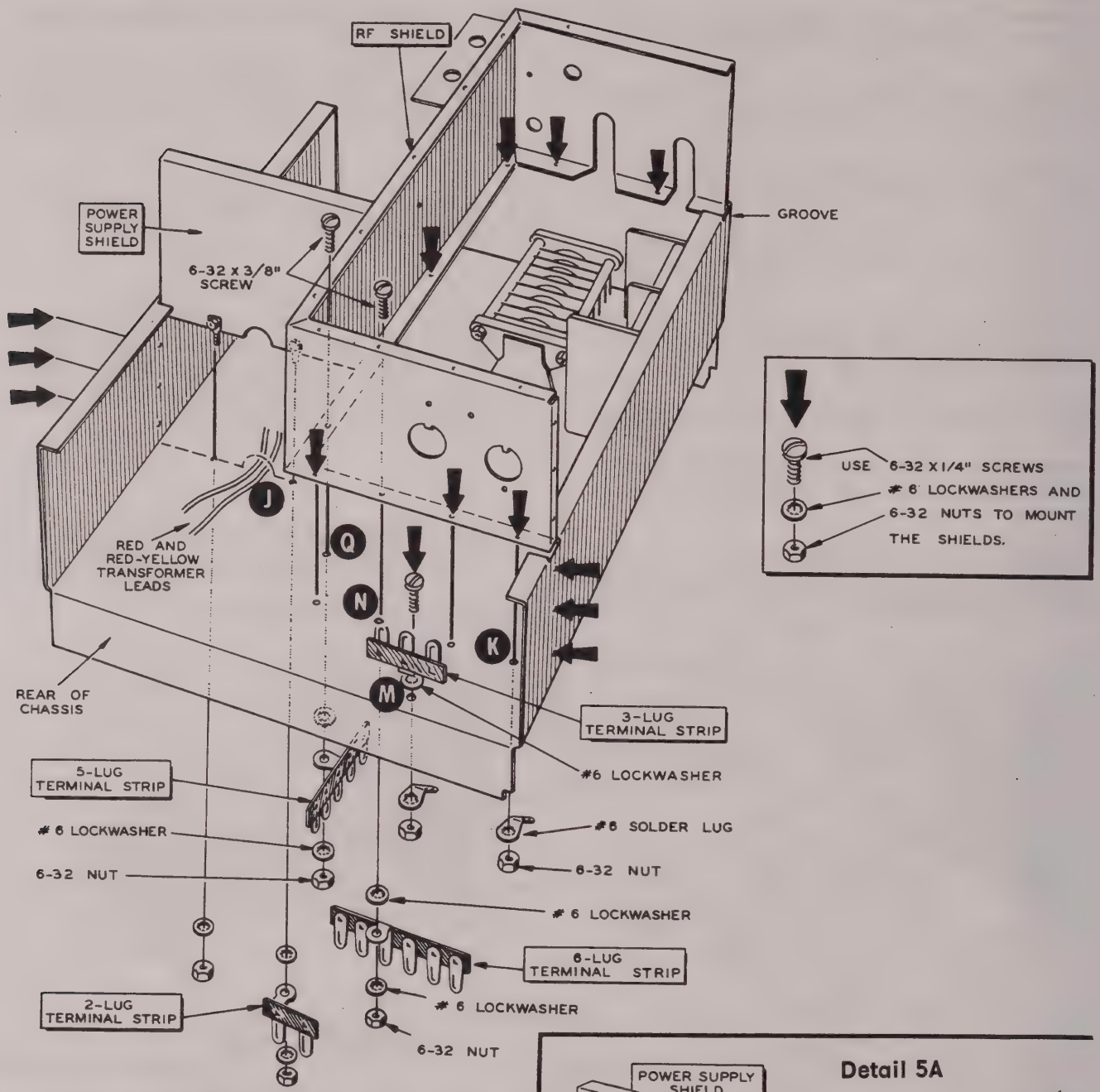

PICTORIAL 5

Refer to Detail 5A and Pictorial 5 for the following steps.

( ) Install 6-32 spade bolts on the power supply shield at the locations shown. Use 6-32 x 1/4" hardware. Position the offset in each spade bolt as shown.

( ) Install the power supply shield on the RF shield, using 6-32 x 1/4" hardware.

Detail 5A

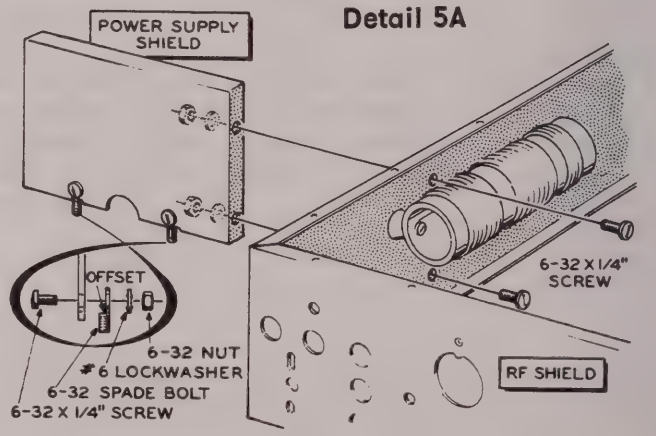

Refer to Pictorial 5 for the following steps.

( ) Position the chassis as shown and fit the RF and power supply shield assembly down on the chassis. Be sure to position the red and red-yellow power transformer leads in the notch of the power supply shield.

( ) Secure the RF shield to the chassis. Use 6-32 x 1/4" hardware at all holes indicated by the arrows, with a #6 solder lug at K.

( ) Install a 6-lug terminal strip at N and a 5-lug terminal strip at Q, using 6-32 x 3/8" hardware. It will be easier to perform this step if the chassis is tipped up on the side next to the transformer. If available, use a magnetized screwdriver to start screws in the hard-to-reach locations.

( ) Secure the power supply shield to the chassis, using 6-32 x 1/4" hardware in the holes indicated by the arrows, and #6 lockwashers and 6-32 nuts on the spade bolts with a 2-lug terminal strip at J.

( ) Install a 3-lug terminal strip at M on top of the chassis and a #6 solder lug at M on the bottom of the chassis. Use 6-32 x 1/4" hardware.

WIRING-CHASSIS BOTTOM

Refer to Pictorial 6 (fold-out from Page 22) for the following steps.

( ) Position the two green power transformer leads through grommet P for connection later.

Connect the remaining power transformer leads as follows:

( ) Black-green to lug 2 of terminal strip S (S-1).

( ) Black-yellow to lug 3 of terminal strip S (NS).

( ) Green-yellow to ground lug 8 of terminal strip S (NS).

( ) Shorter blue to ground lug 8 of terminal strip S (NS).

( ) Longer blue to lug 5 of terminal strip Q (NS).

( ) Black to lug 4 of terminal strip Q (NS).

( ) Black-red to lug 2 of terminal strip Q (NS).

( ) Position the transformer leads as shown.

NOTE: Use the small solid hookup wire in all wiring steps, unless directed otherwise. Cut the specified color of wire to the length given in the step. Then strip 1/4" of insulation from each wire end, unless directed otherwise.

( ) Strip 1/2" of insulation from one end and 1/4" of insulation from other end of a 4-1/4" gray wire.

( ) At the end of this wire with the most insulation removed, pass the wire through lug 10 (S-2) to lug 9 (S-1) of switch B. Connect the other end of the wire to lug 2 of control C (S-1).

( ) Connect a 2-1/2" gray wire from lug 13 of switch B (S-1) to lug 3 of control C (S-1).

( ) Strip 2-3/4" of insulation from one end and 1/4" of insulation from the other end of a 5" gray wire.

( ) At the end with the most insulation removed, pass the wire through lug 3 (S-2), through lug 4 (S-2), through lug 5 (S-2), and through lug 8 (S-2) of switch B to the control solder lug (NS). Connect the other end of the wire to lug 1 of control C (S-1). Be sure the bare portion of the wire does not touch any other lugs or the switch assembly bolt.

( ) Connect one end of a 9" gray wire to lug 6 of switch B (S-1). Pass the other end through hole H in the circuit board for connection later.

( ) Connect one end of a 7" red wire to lug 12 of switch B (S-1). Pass the other end through hole H in the circuit board for connection later.

( ) Connect one end of a 4" yellow wire to lug 2 of switch B (S-1). Pass the other end through hole H in the circuit board for connection later.

( ) Connect a 4-3/4" yellow wire from lug 2 of terminal strip N (NS) to lug 4 of relay L (S-1).

( ) Connect a 4" yellow wire from lug 5 of terminal strip N (NS) to lug 3 of relay L (NS).

( ) Connect a 3" yellow wire from lug 6 of terminal strip N (NS) to the lug of terminal strip V (NS).

( ) Connect one end of a 7" green wire to lug 1 of terminal strip N (NS). Pass the other end through grommet P for connection later.

( ) Referring to the inset drawing of Pictorial 6, connect one end of a 10" large blue wire to the diode lead (point A) extending from the circuit board (S-1). Pass the other end through grommet F for connection later. Cut off the excess diode lead.

( ) Locate the cable assembly and position it on the chassis as shown.

Connect the wires from BO (Breakout) #1 to switch A as follows:

( ) Shorter red to lug 1 (S-1).

( ) Longer red to lug 2 (S-1).

( ) Shorter black to lug 3 (S-1).

( ) Longer black to lug 4 (S-1).

( ) Pass all the wires from BO#2, except the blue, green, yellow, and the two shielded cables, down through hole H in the circuit board for connection later.

Connect the wires from BO#2 to switch B as follows:

( ) Green to lug 1 (S-1).

( ) Yellow to lug 7 (S-1).

NOTE: When soldering the shielded cable connections, do not overheat the connection as the insulation on the inner conductor will melt and permit a short to the shield. It may be easier to make these connections if the switch nut is loosened and the switch turned temporarily. Return the switch to the proper position after the connections are soldered.

( ) Inner lead of the unmarked shielded cable to lug 15 (S-1) and the shield to the control solder lug (NS).

( ) Inner lead of the shielded cable with red band to lug 14 (S-1) and the shield to the control solder lug (S-3).

( ) Blue to lug 11 (S-1).

( ) Connect the blue wire from BO#3 to lug 2 of terminal strip J (NS).

Connect the wires from BO#4 to terminal strip Q as follows:

( ) Red to lug 2 (S-2).

( ) Both black to lug 4 (S-3).

( ) Inner lead from the shielded cable to lug 1 (NS) and the shield to lug 3 (NS).

Connect the following wires from BO#5 to terminal strip S.

( ) Yellow to lug 7 (NS).

( ) Red to lug 4 (NS).

( ) Small black to lug 3 (S-2).

( ) Large black to lug 1 (NS).

( ) Violet to lug 6 (NS).

( ) Pass the violet, gray, brown, and white wires from BO#6 through grommmet P for connection later.

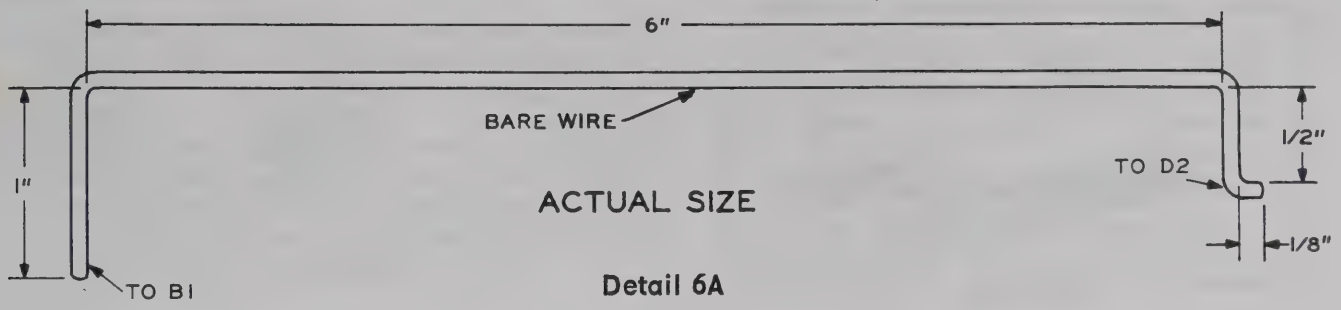

Detail 6A

Connect the following wires from BO#6 to terminal strip N.

( ) Inner lead of the shielded cable to lug 3 (NS) and the shield to lug 4 (NS).

( ) Both yellow to lug 2 (NS).

( ) Green to lug 1 (NS).

( ) Twist together the two black wires from BO#6 as shown. Connect either wire to position 1 (S-1) and the other to position 2 (S-1) on the motor. Pass the wire ends through the holes in the coil form and solder them directly to the solder connections on the motor.

( ) Referring to Detail 6A, bend a length of bare wire to the shape shown. The Detail is full-size and may be used as a pattern.

( ) Connect this formed bare wire from lugs B1 of switch AK (S-2) to lug 2 of variable capacitor D (S-1).

( ) Referring to Detail 6B, bend a length of bare wire to the shape shown. The Detail is full-size and may be used as a pattern.

( ) Connect this formed bare wire from the bare wire near lug 2 of variable capacitor D (S-1) to lug 1 of variable capacitor D (S-1). Bend lug 1 of D as shown.

CAUTION: Be sure the bare wires just installed do not touch the chassis.

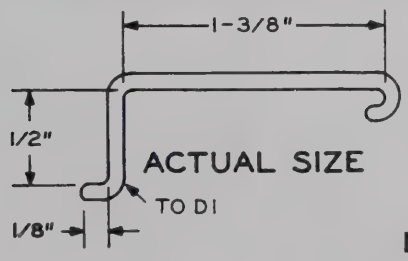

Detail 6B

( ) Referring to Detail 6C, prepare a 9-1/2" length of large (RG-58A/U) shielded cable.

( ) At either end of the prepared cable, connect the inner lead to lug 7 of relay L (S-1) and the shield to solder lug K (NS).

( ) At the other end of the cable, connect the inner lead to the bare wire near lug 2 of variable capacitor D (S-1) and the shield to solder lug E (NS), as shown.

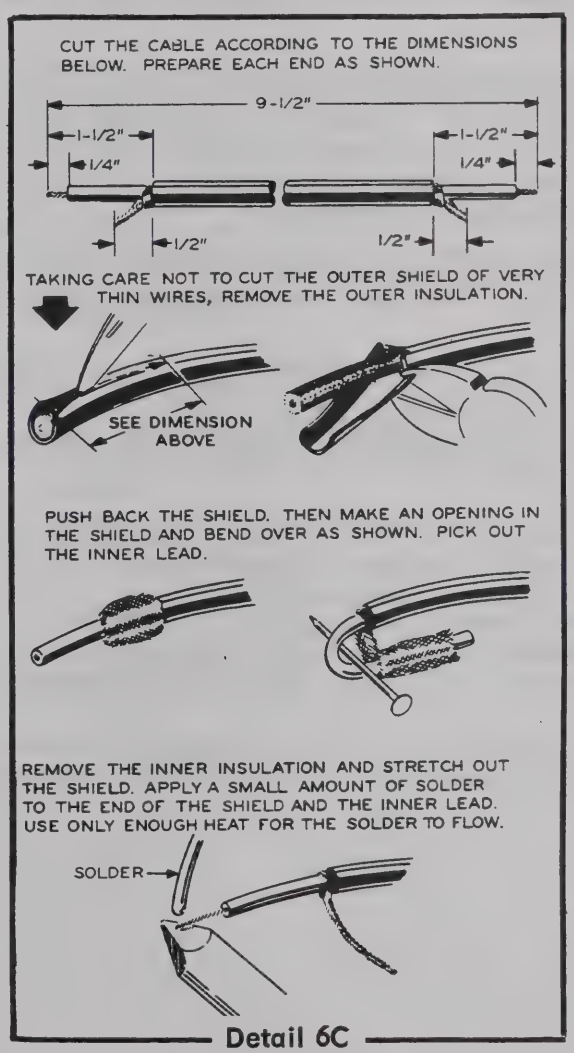
CUT THE CABLE ACCORDING TO THE DIMENSIONS BELOW. PREPARE EACH END AS SHOWN.
9-1/2"
1-1/2"
1/4"
1/2"
TAKING CARE NOT TO CUT THE OUTER SHIELD OF VERY THIN WIRES, REMOVE THE OUTER INSULATION.
SEE DIMENSION ABOVE
PUSH BACK THE SHIELD. THEN MAKE AN OPENING IN THE SHIELD AND BEND OVER AS SHOWN. PICK OUT THE INNER LEAD.
REMOVE THE INNER INSULATION AND STRETCH OUT THE SHIELD. APPLY A SMALL AMOUNT OF SOLDER TO THE END OF THE SHIELD AND THE INNER LEAD. USE ONLY ENOUGH HEAT FOR THE SOLDER TO FLOW.
SOLDER

Detail 6C

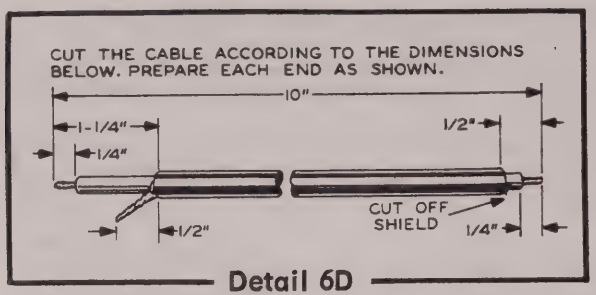

Detail 6D

( ) Referring to Detail 6D, prepare a 10" length of large (RG-58A/U) shielded cable.

( ) At the end of the prepared cable with the shield, connect the inner lead to lug 8 of relay L (S-1) and the shield to solder lug K (S-2).

( ) Pass the other end of the cable behind relay L and through grommet P for connection later.

( ) Connect the 1.1 mh RF choke (#45-4) from the bare wire connected between lug B1 of switch AK and lug 2 of variable capacitor D (S-1), to solder lug E (S-2). Position the choke as shown.

( ) Connect a .02 μfd disc capacitor between lugs 3 (NS) and 4 (NS) of terminal strip N.

Refer to Pictorial 7 for the following steps.

NOTE: All resistors are 1/2 watt, unless specified otherwise.

( ) Connect a 4700 Ω (yellow-violet-red) resistor from lug 1 of phono socket Z (NS) to lug 6 of terminal strip S (S-2).

( ) Connect a .02 μfd disc capacitor between lugs 1 (S-2) and 2 (S-1) of phono socket Z.

( ) Connect a .02 μfd disc capacitor between lugs 1 (NS) and 2 (S-1) of phono socket Y.

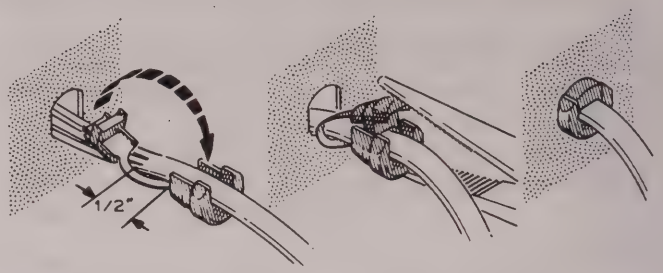

Detail 7A

( ) Connect a .005 μfd 1.4 KV disc capacitor between lugs 5 (NS) and 1 (NS) of terminal strip S.

( ) Connect a .005 μfd 1.4 KV disc capacitor between lugs 4 (NS) and 8 (S-3) of terminal strip S.

( ) Locate the line cord and separate the three leads for 4".

( ) Referring to Detail 7A, install the line cord in the large hole in the rear corner of the chassis. Use the line cord strain relief. Position the strain relief approximately 1/2" from the point where the wires separate.

Connect the leads of the line cord to terminal strip S as follows. Cut each lead to the required length to reach its connecting point.

( ) Green to lug 5 (S-2).

( ) Either gray to lug 1 (S-3).

( ) Other gray to lug 4 (S-3).

( ) Connect a 33 Ω 1 watt (orange-orange-black) resistor from lug 1 of phono socket Y (S-2) to lug 7 of terminal strip S (S-2).

( ) Connect a .02 μfd disc capacitor between lugs 1 (NS) and 3 (NS) of terminal strip Q.

( ) Connect the positive (+) lead of a 20 μfd electrolytic capacitor to lug 3 of terminal strip Q (S-3) and the other lead to lug 5 of terminal strip N (NS). Use small sleeving on the lead to terminal strip N.

NOTE: WHEN INSTALLING SILICON DIODES, THE CATHODE END SHOULD BE PLACED AS DIRECTED. THE CATHODE END IS MARKED WITH EITHER A COLOR END, COLOR DOT OR COLOR BAND. IN THE ILLUSTRATION, THE SYMBOL K INDICATES THE CATHODE END.

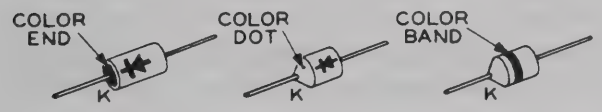

Detail 7B

( ) Referring to Detail 7B, connect the lead from the cathode end of a silicon diode (large body) to lug 6 (S-2) and the other lead to lug 5 (NS) of terminal strip N.

( ) Connect the positive (+) lead of a 2 μfd electrolytic capacitor to lug 4 (NS) and the other lead to lug 2 (NS) of terminal strip N.

( ) Connect a 10 KΩ (brown-black-orange) 2 watt resistor between lugs 4 (S-4) and 5 (S-4) of terminal strip N.

( ) Connect a 1.5 Ω (brown-green-gold-silver) resistor between lugs 2 (NS) and 1 (S-3) of terminal strip N.

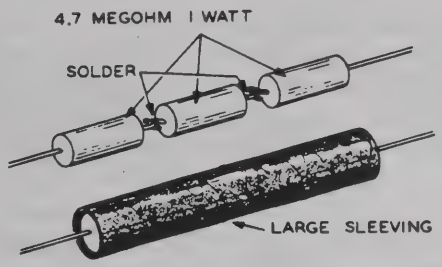

Detail 7C

( ) Referring to Detail 7C, prepare a resistor combination, using three 4.7 megohm (yellow-violet-green) 1 watt resistors and the large sleeving.

( ) Connect this resistor combination from lug 2 of terminal strip J (NS) to point B on the foil of the circuit board. Solder the lead directly to the foil. Use sleeving on the lead to the circuit board.

( ) Connect a 15 KΩ (brown-green-orange) resistor between lugs 1 (S-1) and 2 (S-3) of terminal strip J.

This Linear Amplifier may be operated from either 120 volts or 240 volts AC. Perform one of the following two steps, depending on the line voltage to be used. Refer to the inset drawing on Pictorial 7.

( ) For 120 volt AC operation, connect one bare wire under screws 1 and 2, and another bare wire under screws 3 and 4 of terminal strip S.

( ) For 240 volt AC operation, connect a bare wire under screws 2 and 3 of terminal strip S.

Detail 8A

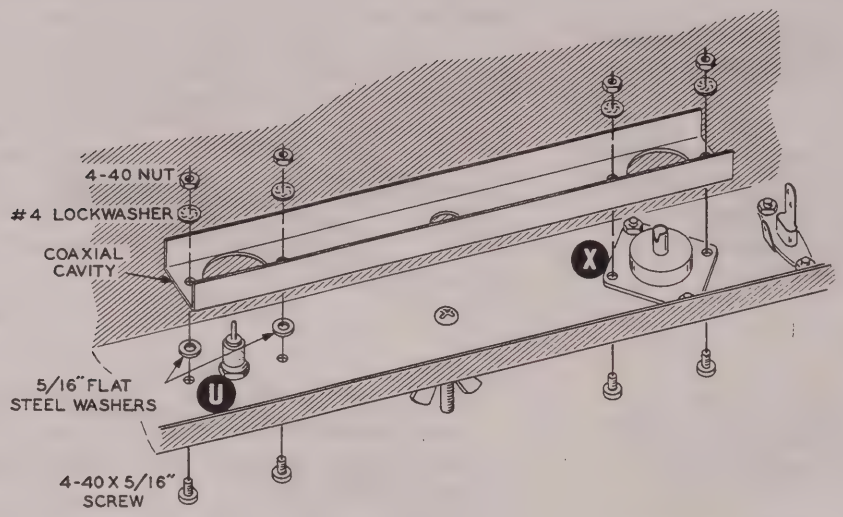

WIRING-SWR BRIDGE

NOTE: Position the chassis on the rear apron for the following steps.

( ) Referring to Pictorial 8 and Detail 8A, install the coaxial cavity, using 4-40 x 5/16" hardware and two 5/16" flat steel washers. Be sure no wires are pinched between the cavity and the chassis.

Refer to Pictorial 8 and Detail 8B for the following steps.

( ) Slide the three plastic spacers on the RF driver element. Be sure the two small holes in each spacer are position correctly. Position the spacers approximately as shown.

( ) Insert the two RF pickup elements through the plastic spacers as shown.

( ) Position this assembly in the coaxial cavity with a 3/16" spacer on coax socket X.

( ) Referring to the inset drawing of Detail 8B, solder the RF driver element to coax socket X (S-1) and standoff U (S-1).

( ) Referring to the inset drawing on Pictorial 8, cut the flexible lead at lug 10 of relay L. Cut the lead as close to the lug as possible.

( ) Carefully remove the sleeving from this lead. Then cut the lead to 1-1/4" and the sleeving to 1" in length. Replace the sleeving on the lead.

Detail 8B

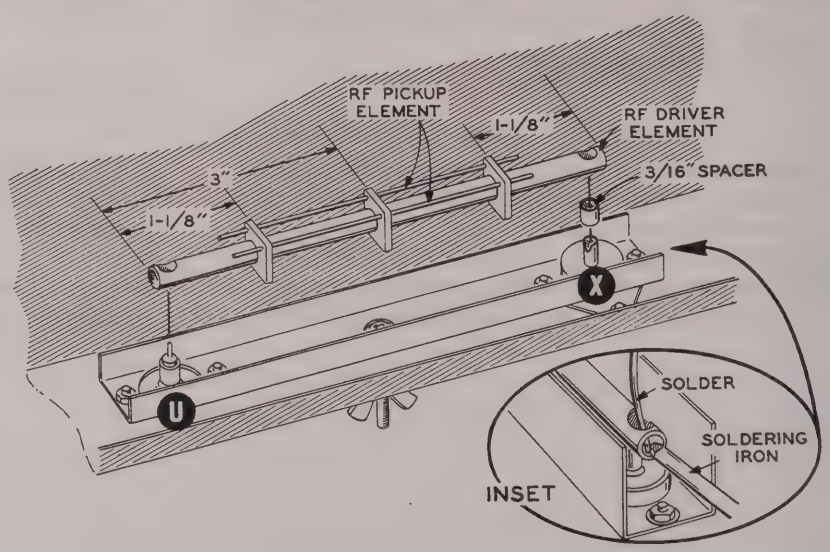

( ) Connect this lead to lug 1 of phono socket T (S-1).

( ) In a like manner, cut the flexible lead at lug 9 of relay L.

( ) Remove the sleeving from this lead. Then cut the lead to 1-1/4" and the sleeving to 1" in length. Replace the sleeving on this lead.

( ) Connect the end of this lead in the hole at 5 of the RF driver element (S-1).

( ) Connect a 1-1/2" bare wire between lugs 5 (S-1) and 6 (S-1) of relay L. Be sure this wire is positioned below the top edge of the relay so it will not short to the cabinet later.

NOTE: When soldering leads to the RF pickup elements in the next four steps, slide the plastic spacer away from the area being soldered. Then, reposition the spacer after the connection has cooled to prevent melting the spacers. Be sure to connect the component leads to the proper RF pickup element.

( ) Connect a 100 Ω (brown-black-brown) resistor from #1 on the RF pickup element (S-1) to solder lug R (S-1). Connect the resistor lead at the very end of the RF pickup element. Position the resistor as shown.

CAUTION: When soldering the leads of the small silicon and crystal diodes, grip the lead between the connection and the body of the diode with a pair of long-nose pliers. This will protect the diodes from heat damage. By placing a rubber band around the handles of the pliers and clipping the pliers onto the diode lead, you will have both hands free for soldering.

( ) Cut both leads of a crystal diode (brown-white-brown) to 1/2". Connect the cathode (color band end) lead to lug 1 of terminal strip Q (S-3) and the other lead at #2 of the RF pickup element (S-1). Be sure the diode lead is positioned 5/8" from the end of the RF pickup element.

( ) Connect a 100 Ω (brown-black-brown) resistor from #4 of the RF pickup element (S-1) to the solder lug M (S-1). Connect the resistor lead at the very end of the RF pickup element. Position the resistor as shown.

( ) Cut both leads of a crystal diode (brown-white-brown) to 5/8". Connect the cathode (color band end) lead to lug 3 of terminal strip N (S-3) and the other lead at #3 of the RF pickup element (S-1). Be sure the diode lead is positioned 5/8" from the end of the RF pickup element.

( ) Connect a 465 Ω 15 watt resistor from lug 5 of terminal strip Q (S-2) to the lug of terminal strip V (S-2).

( ) Connect a 2000 Ω 7 watt resistor from lug 2 of terminal strip N (S-6) to lug 3 of relay L (S-2). Position the body of the resistor down against the chassis.

( ) Referring to Detail 8C, install the angle brackets, using 6-32 x 3/8" flat head hardware.

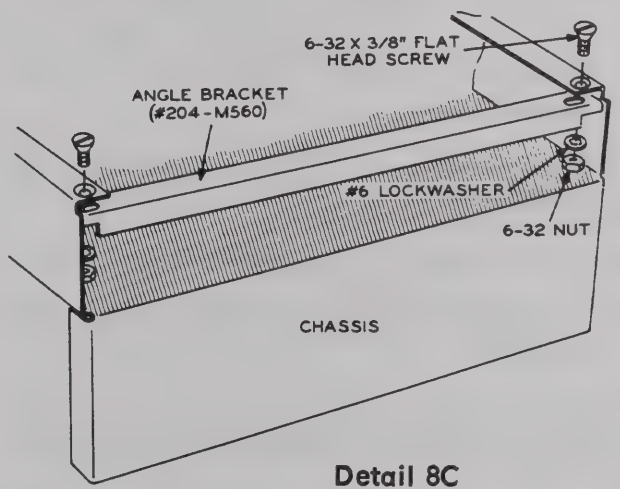

Detail 8C

( ) Remove the protective backing from a DANGER label and press it firmly in place on the underside of the chassis as shown.

This completes the wiring under the chassis. Check to see that all connections are soldered. Shake out any wire clippings and solder splashes.

WIRING-CHASSIS TOP

Refer to Pictorial 9 for the following steps.

Connect the power transformer leads to the circuit board as follows:

( ) Red to RED (S-1).

( ) Red-yellow to RED-YEL (S-1).

Connect the wires extending from hole H of the circuit board as follows:

( ) Short gray coming from the cable assembly to hole D of the circuit board (S-1).

( ) Yellow coming from switch B to hole C of the circuit board (S-1).

NOTE: The circuit breakers will be mounted after they are wired.

( ) Either large black coming from the cable assembly to lug 1 of a circuit breaker (S-1).

( ) Other large black to lug 2 of this circuit breaker (S-1).

( ) Either large red coming from the cable assembly to lug 1 of the other circuit breaker (S-1).

( ) Other large red to lug 2 of this circuit breaker (S-1).

Refer to Detail 9A for the following steps.

( ) Remove the round nut from both circuit breakers.

( ) Adjust the hex nut so it is 3/16" from the end of the threaded bushing on each circuit breaker.

( ) Install the circuit breaker with the black wires connected to it, at AM on the circuit breaker mounting bracket. Use the round nut removed from the circuit breaker. Be sure the wide space is between the circuit breaker lug and the bracket.

( ) In a like manner, install the circuit breaker with the red wires connected to it at AL of the circuit breaker bracket. Again position the wide space between the lug and bracket.

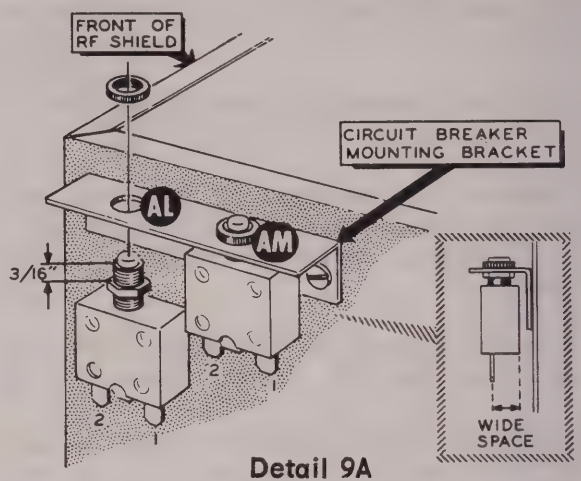

Detail 9A

( ) Fit the solder lug on the end of the 10 and 15 meter final coil on the bolts at #1 of the variable capacitor G. This coil will be secured later.

( ) Locate the 100 $\mu\mu$f tubular capacitor and mount a #6 solder lug with a 6-32 x 3/16" screw to one end of this capacitor as shown in Detail 9B.

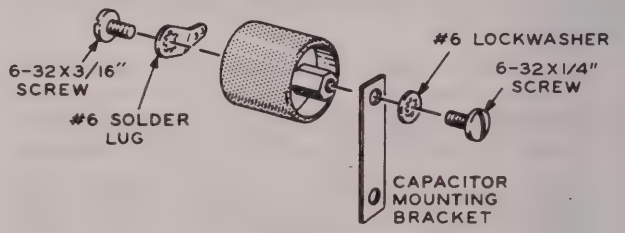

Detail 9B

( ) Now mount this capacitor to the capacitor mounting bracket, using a 6-32 x 1/4" screw and a #6 lockwasher as shown in Detail 9B.

( ) Place the capacitor mounting bracket on the bolt at #1 of variable capacitor G. Secure it and the final coil mounted previously with a #6 lockwasher and a 6-32 nut.

( ) Connect the end of the wire coming from lugs A5 of switch AK to the lug of the 100 $\mu\mu$f tubular capacitor mounted on lug 1 of variable capacitor G (S-1).

( ) Thread a 1000 $\mu\mu$f tubular ceramic capacitor onto the bolt at #2 of variable capacitor G.

( ) Install a #6 solder lug at AP on the tubular ceramic capacitor, using a 6-32 x 3/16" screw. Position the solder lug as shown.

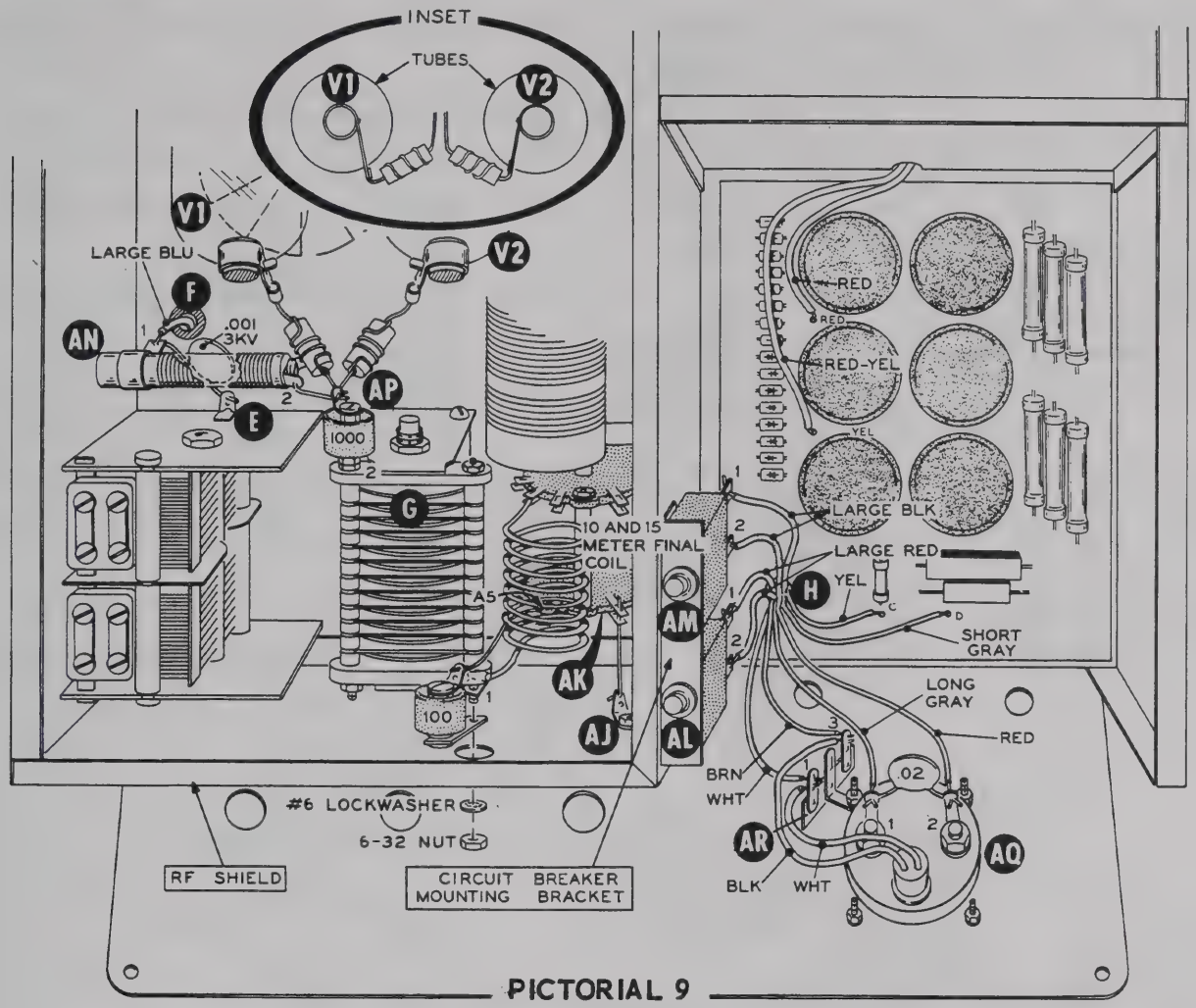

PICTORIAL 9

( ) Cut both leads of a .001 μfd 3 KV disc capacitor to 1/2" in length.

( ) Connect one lead of this capacitor to solder lug E (S-1). The other lead will be connected later.

( ) Referring to Detail 9C, install the 50 μh RF choke (#45-61) at AN, using a 6-32 x 3/8" screw and a 1/2" fiber flat washer.

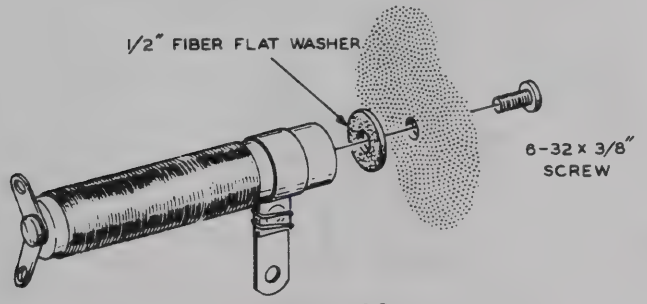

Detail 9C

( ) Connect the lead of the .001 μfd disc capacitor coming from solder lug E to lug 1 of RF choke AN (NS).

( ) Connect the end of the large blue wire coming from grommet F to lug 1 of RF choke AN (S-2).

( ) Connect a 1-1/4" bare wire from lug 2 of RF choke AN (S-1) to solder lug AP (NS).

( ) Referring to Detail 9D, prepare two anode clip and RF choke combinations. Use anode clips and parasitic RF chokes (#45-53) as shown.

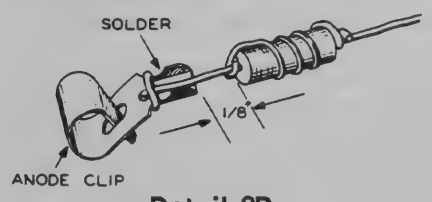

Detail 9D

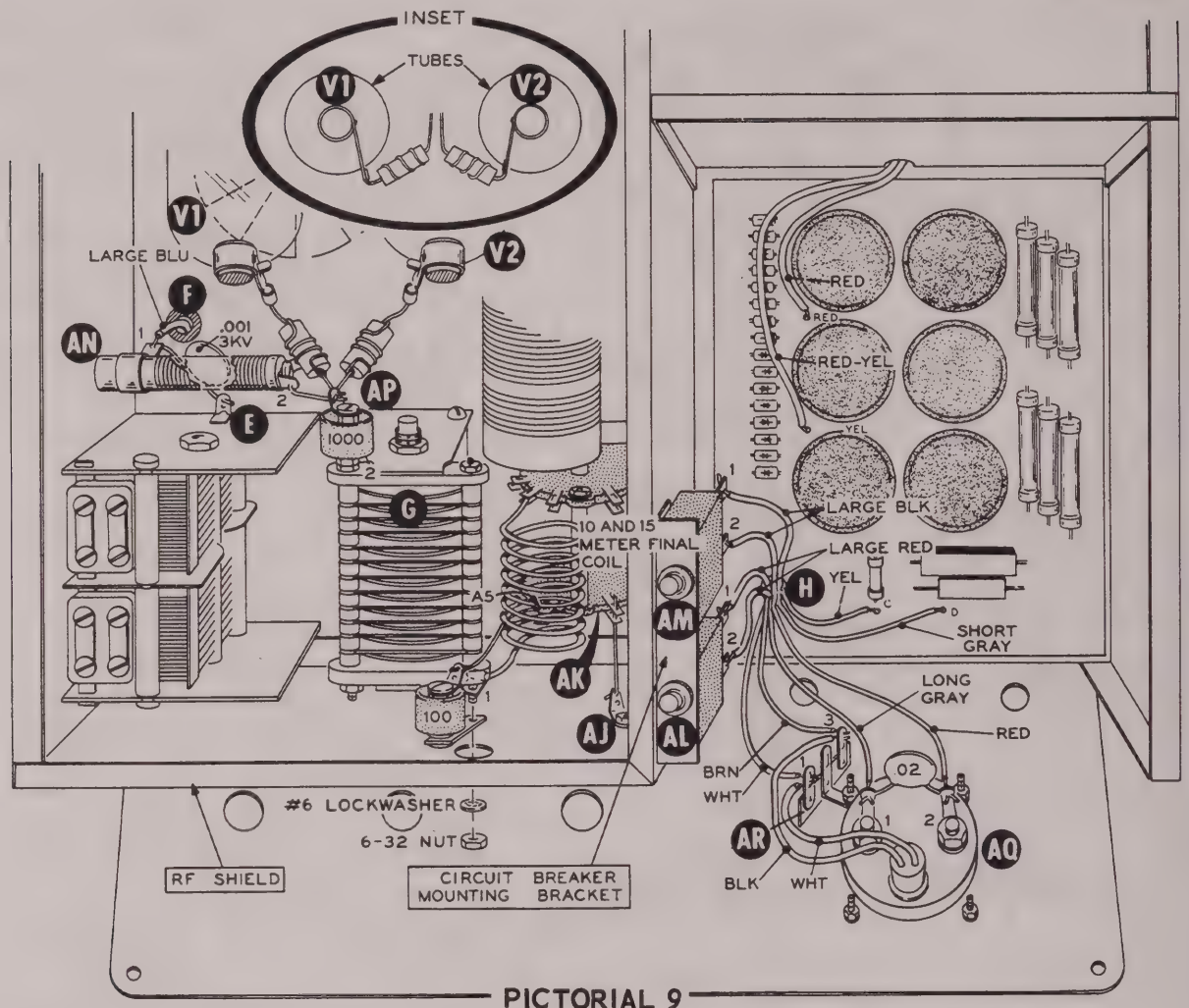

PICTORIAL 9
(Repeat)

( ) Install the 572-B or T160-L tubes in tube sockets V1 and V2.

( ) Install an anode clip and RF choke combination on the cap of each tube as shown in the inset drawing in Pictorial 9.

( ) Connect the free choke lead of one of these combinations to solder lug AP (NS). Position the combination as shown.

( ) Connect the free choke lead of the other combination to solder lug AP (S-3). Position the combination as shown.

( ) Referring to Detail 9E, install the meter at AQ on the front panel with a 3-lug terminal strip at AR. Use a #6 lockwasher plus the lockwashers and nuts supplied with the meter. Bend the lugs of the meter upward, as shown.

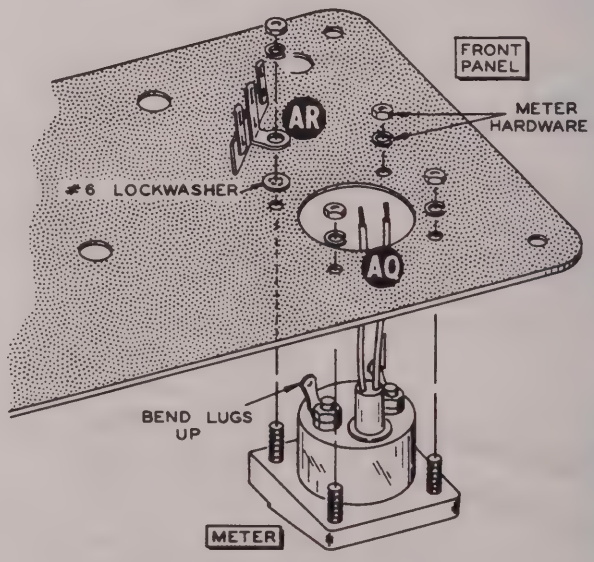

Detail 9E

( ) Remove the shorting clip from between the meter lugs.

( ) Connect a .02 μfd disc capacitor between lugs 1 (NS) and 2 (NS) of meter AQ.

( ) Remove the control nuts from B, C, and AK.

( ) Position the front panel in front of the chassis.

Connect the wires extending from hole H of the circuit board as follows:

( ) Red to lug 2 of meter AQ (S-2).

( ) Long gray to lug 1 of meter AQ (S-2).

( ) White to lug 1 of terminal strip AR (NS).

( ) Brown to lug 3 of terminal strip AR (NS).

( ) Connect the white lead from the meter pilot lamp socket to lug 1 of terminal strip AR (S-2).

( ) Connect the black lead from the meter pilot lamp socket to lug 3 of terminal strip AR (S-2).

( ) Referring to Detail 9F, install the front panel on the chassis, using a control lockwasher, control flat washer, and a control nut at AK, with control flat washers and control nuts at B and C. Do not tighten the nuts at this time.

( ) Secure the four corners of the front panel to the chassis, using 6-32 x 3/8" phillips head hardware. Do not tighten at this time.

( ) Now center the front panel so the rocker switch works freely. Tighten the three control nuts and the hardware at the corners of the front panel.

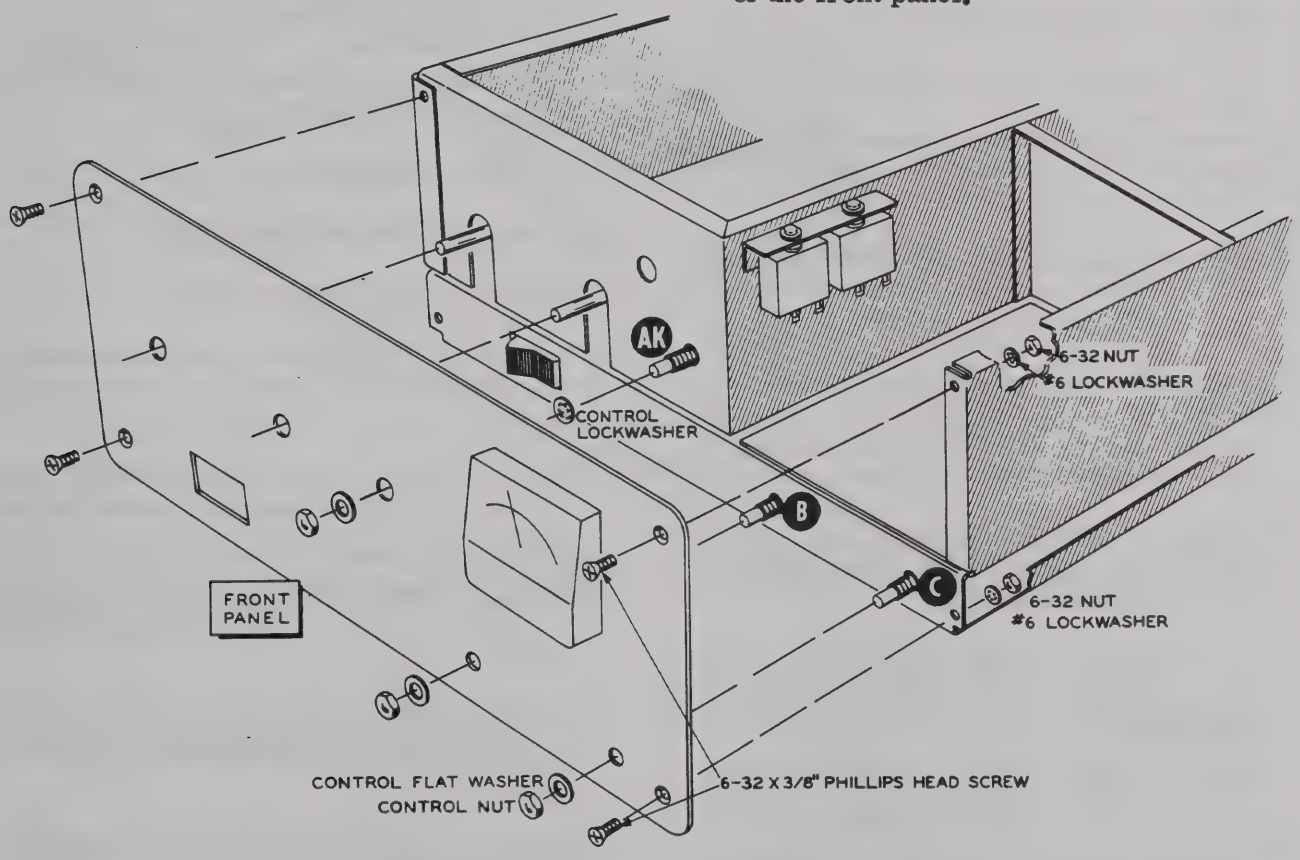

Detail 9F

FINAL WIRING

Refer to Pictorial 10 for the following step.

Connect the wires coming from grommet P as follows:

( ) Shielded cable inner lead to lug C12 of switch AK (S-1). The shield is not used at this end of the cable.

( ) Shorter green power transformer lead to lug 3 of terminal strip M (NS).

( ) Longer green power transformer lead to lug 1 of terminal strip M (NS).

( ) Brown to lug 1 of terminal strip M (NS).

( ) White to lug 3 of terminal strip M (NS).

( ) Green to lug 6 of terminal strip AB (NS).

( ) Violet to lug 5 of terminal strip AB (NS).

( ) Gray to lug 1 of terminal strip AB (NS).

( ) Connect a 33 Ω (orange-orange-black) 1 watt resistor from lug 3 of tube socket V2 (NS) to lug 3 of terminal strip AB (NS).

( ) Connect a 33 Ω (orange-orange-black) 1 watt resistor from lug 3 of tube socket V1 (NS) to lug 3 of terminal strip AB (NS).

( ) Connect a 5 μμf disc capacitor from lug 2 of terminal strip AB (NS) to the lead of the resistor going to lug 3 of tube socket V1 (S-1). Position the capacitor as shown.

( ) Connect a 3300 Ω (orange-orange-red) 1 watt resistor between lugs 6 (NS) and 3 (NS) of terminal strip AB.

( ) Connect the 28 μh RF choke (#45-18) between lugs 3 (S-4) and 6 (NS) of terminal strip AB.

( ) Connect a .02 μfd disc capacitor between lugs 1 (NS) and 2 (NS) of terminal strip M.

( ) Connect a .02 μfd disc capacitor between lugs 2 (S-2) and 3 (NS) of terminal strip M.

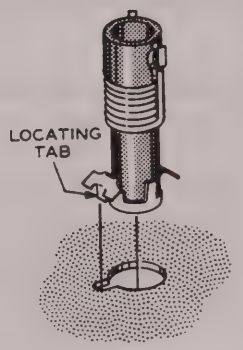

Detail 10A

( ) Connect a 3" bare wire from lug C6 of switch AK (S-1) to lug 2 of tube socket V2 (NS). Use small sleeving. Flatten the end of the wire that connects to the switch lug.

( ) Referring to Detail 10A, install the (#40-728) coil at CA. Press on the coil until the retaining clips snap into place.

( ) In a like manner, install the (#40-727) coil at CB.

( ) Install the (#40-593) coil at CC.

( ) Install the (#40-592) coil at CD.

( ) Install the (#40-591) coil at CE.

( ) Connect a 68 μμf mica capacitor from lug 2 of coil CA (NS) to lug 1 of solder lug AE (S-1).

( ) Connect a 75 μμf mica capacitor from lug 2 of coil CB (NS) to lug 2 of solder lug AE (NS).

( ) Connect a 200 μμf mica capacitor from lug 2 of coil CC (NS) to lug 1 of solder lug AF (NS).

( ) Connect a 310 μμf mica capacitor from lug 2 of coil CD (NS) to lug 2 of solder lug AF (NS).

( ) Connect a 470 μμf silver mica capacitor from lug 2 of coil CE (NS) to lug 2 of solder lug AF (S-2).

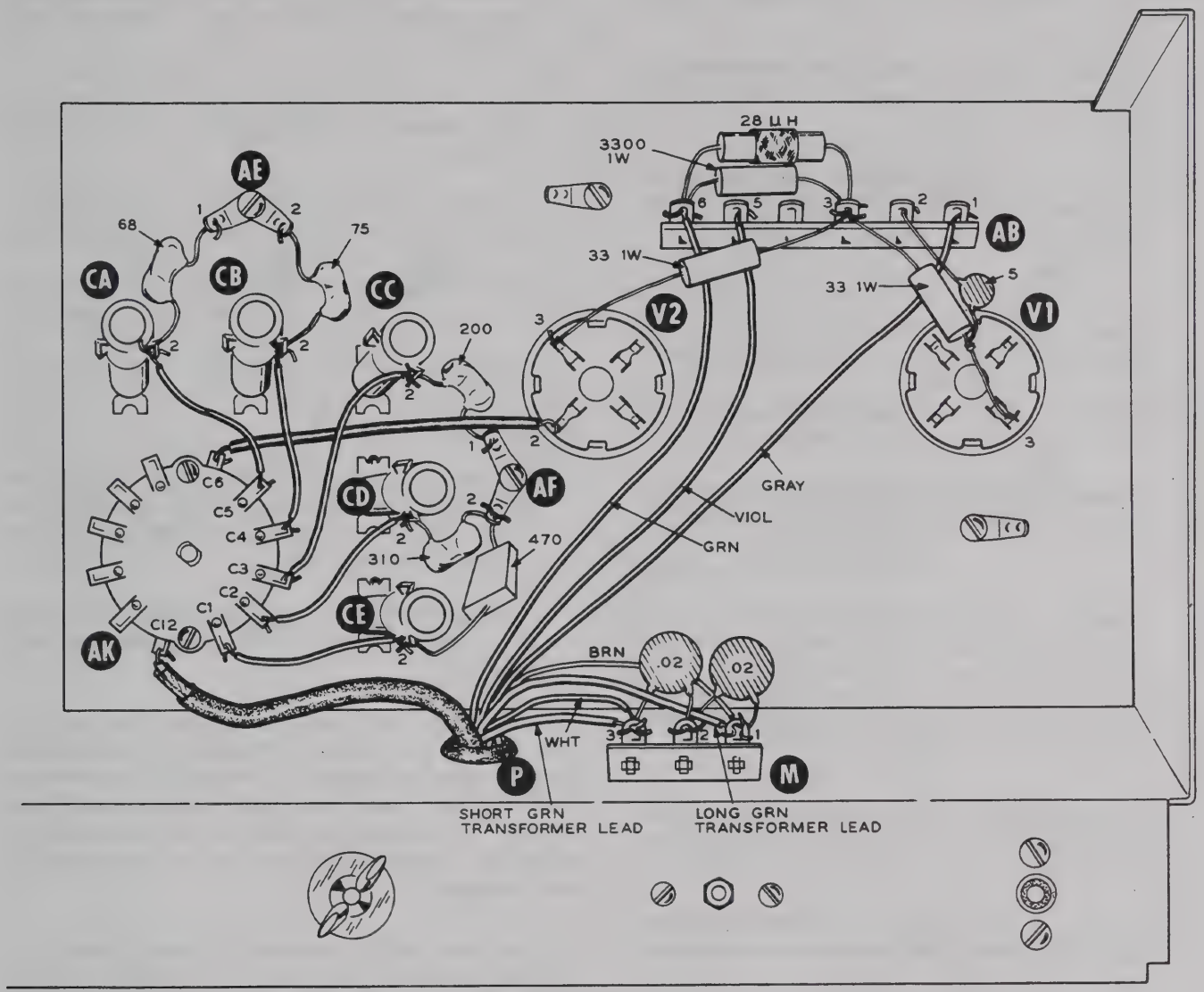

PICTORIAL 10

NOTE: When connecting wires to the remaining lugs of switch AK be sure to solder both lugs at each location.

( ) Connect a 1-1/4" gray wire from lug 2 of coil CA (S-2) to lugs C5 of switch AK (S-1).

( ) Connect a 1-1/4" gray wire from lug 2 of coil CB (S-2) to lugs C4 of switch AK (S-1).

( ) Connect a 2" gray wire from lug 2 of coil CC (S-2) to lugs C3 of switch AK (S-1).

( ) Connect a 1-1/4" gray wire from lug 2 of coil CD (S-2) to lugs C2 of switch AK (S-1).

( ) Connect a 1-1/4" gray wire from lug 2 of coil CE (S-2) to lugs C1 of switch AK (S-1).

Refer to Pictorial 11 for the following steps.

( ) Connect a 360 μμf mica capacitor from lug 1 of coil CC (NS) to lug 2 of solder lug AE (S-2).

( ) Connect a 510 μμf silver mica capacitor from lug 1 of coil CD (NS) to lug 1 of solder lug AF (S-2).

( ) Connect a 2-1/4" gray wire from lug 1 of coil CE (S-1) to lugs C7 of switch AK (S-1).

( ) Connect a 2" gray wire from lug 1 of coil CD (S-2) to lugs C8 of switch AK (S-1).

( ) Connect a 2-3/4" gray wire from lug 1 of coil CC (S-2) to lugs C9 of switch AK (S-1).

( ) Connect a 2" gray wire from lug 1 of coil CB (S-1) to lugs C10 of switch AK (S-1).

( ) Connect a 2-1/4" gray wire from lug 1 of coil CA (S-1) to lugs C11 of switch AK (S-1).

( ) Connect a 200 μμf mica capacitor from lug 3 of tube socket V2 (S-2) to solder lug AD (S-1).

( ) Connect a .02 μfd disc capacitor between lugs 4 (NS) and 5 (NS) of terminal strip AB.

( ) Connect a .02 μfd disc capacitor between lugs 4 (NS) and 6 (S-4) of terminal strip AB.

( ) Connect a .02 μfd disc capacitor between lugs 4 (NS) and 1 (NS) of terminal strip AB. Use sleeving on both leads.

( ) Connect an 18 μμf disc capacitor between lugs 4 (S-4) and 2 (NS) of terminal strip AB.

( ) Connect a 2-1/4" bare wire from lug 4 of tube socket V2 (NS) to lug 1 of tube socket V1 (NS).

( ) Connect a 2-1/4" bare wire from lug 1 of tube socket V2 (NS) to lug 4 of tube socket V1 (NS).

( ) Connect a .02 μfd disc capacitor between lugs 1 (NS) and 4 (S-2) of tube socket V2.

( ) Connect a .02 μfd disc capacitor between lugs 1 (S-3) and 2 (S-2) of tube socket V2.

( ) Connect a 4700 Ω (yellow-violet-red) resistor between lugs 2 (NS) and 5 (S-3) of terminal strip AB.

( ) Connect the cathode (band end) lead of an IN458 silicon diode (yellow-green-gray) to lug 1 (S-3) and the other lead to lug 2 (S-4) of terminal strip AB.

( ) Connect a 200 μμf mica capacitor from lug 3 of tube socket V1 (S-2) to solder lug AC (S-1).

NOTE: In the following steps, bend the leads of the 10 μh RF choke (#45-60) to reach their proper connecting points, then cut off any excess lead lengths. Bend the leads very carefully so as not to damage the coil form. Also, do not allow the choke to extend over the rear edge of the chassis.

( ) At one end of the coil, connect lead 1 to lug 3 (S-4) and lead 2 to lug 1 (S-4) of terminal strip M.

( ) At the other end of the coil, connect lead 4 to lug 4 (S-2) and lead 3 to lug 1 (S-2) of tube socket V1.

This completes the wiring. Carefully check to see that no wiring errors were made and that all connections are soldered. Shake out any wire clippings and solder splashes.

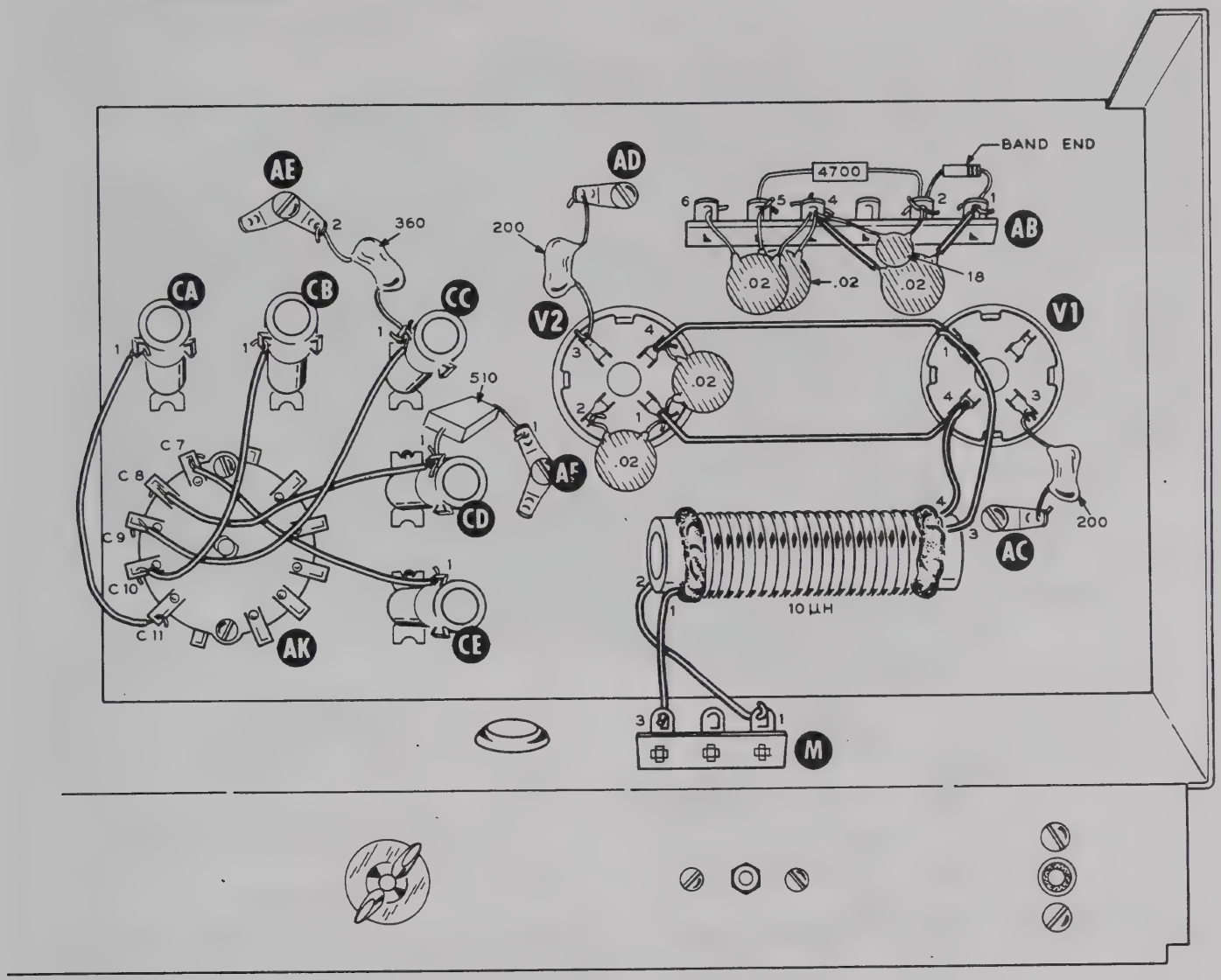

PICTORIAL 11

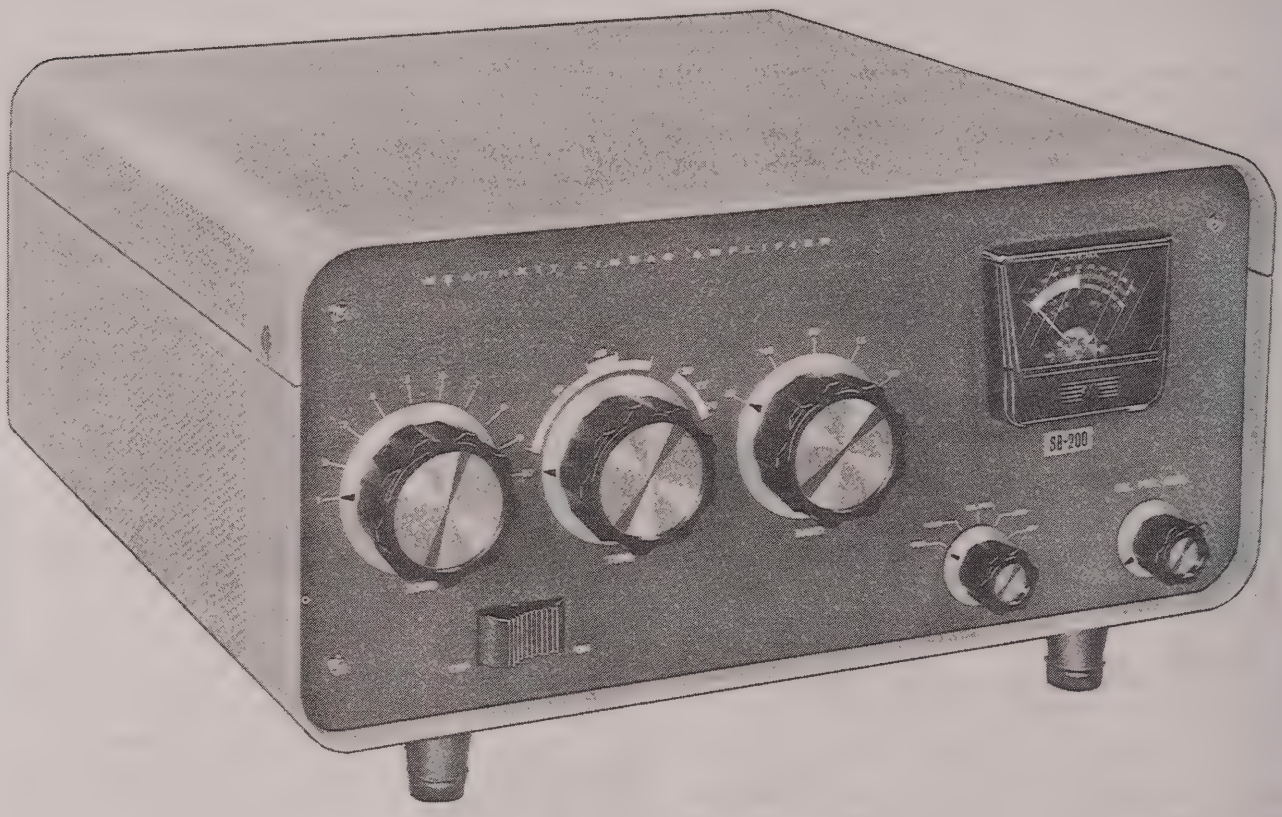

PICTORIAL 12

Refer to Pictorial 12 for the following steps.

( ) Rotate all capacitor, switch, and control shafts fully counterclockwise, except the TUNE capacitor which should be rotated until the plates are fully meshed (closed).

( ) Install small knobs at the Meter and REL PWR SENS locations, using 8-32 x 1/4" setscrews. Position the pointers as shown.

( ) Install the large knobs at the LOAD, TUNE, and BAND locations, using 8-32 x 1/4" setscrews. Position the pointers as shown.

( ) Remove the protective backing from the nameplate and press it firmly in place directly under the meter. The nameplate should cover the printed outline at the nameplate location.

( ) Referring to Pictorial 13, prepare a 4 foot long cable to reach between the Linear Amplifier and your exciter. Use the large shielded cable (RG-58A/U) and a phono plug connected at one end. It will be necessary to install the proper type connector to the other end of this cable to match the antenna connector of your exciter.

NOTE: If it is necessary to install a coaxial connector to any of the cables, refer to Pictorial 14, for proper installation.

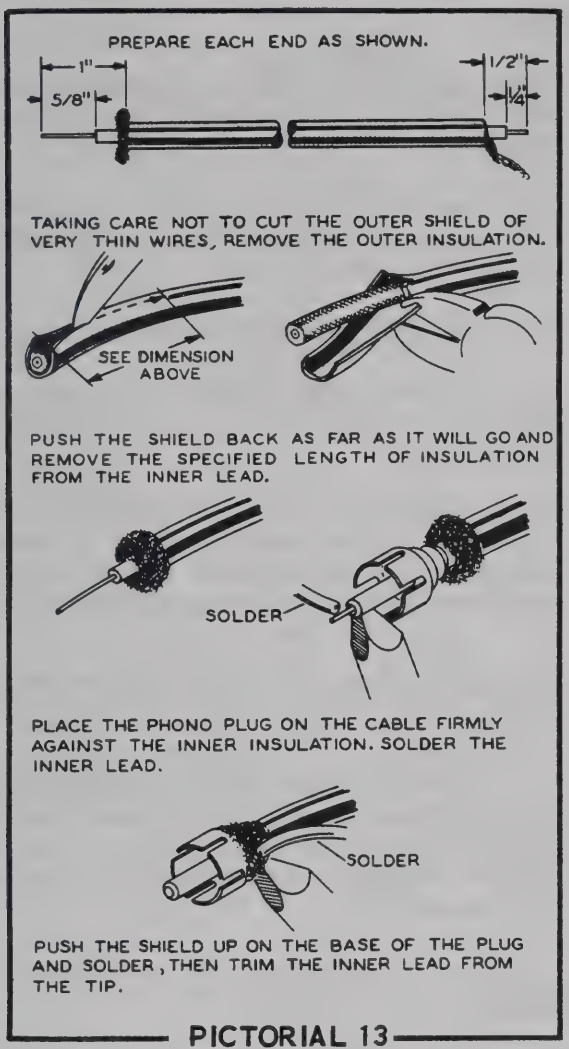
PREPARE EACH END AS SHOWN.
1"
5/8"
1/2"
1/4"
TAKING CARE NOT TO CUT THE OUTER SHIELD OF VERY THIN WIRES, REMOVE THE OUTER INSULATION.
SEE DIMENSION ABOVE
PUSH THE SHIELD BACK AS FAR AS IT WILL GO AND REMOVE THE SPECIFIED LENGTH OF INSULATION FROM THE INNER LEAD.
SOLDER
PLACE THE PHONO PLUG ON THE CABLE FIRMLY AGAINST THE INNER INSULATION. SOLDER THE INNER LEAD.
SOLDER
PUSH THE SHIELD UP ON THE BASE OF THE PLUG AND SOLDER, THEN TRIM THE INNER LEAD FROM THE TIP.

PICTORIAL 13

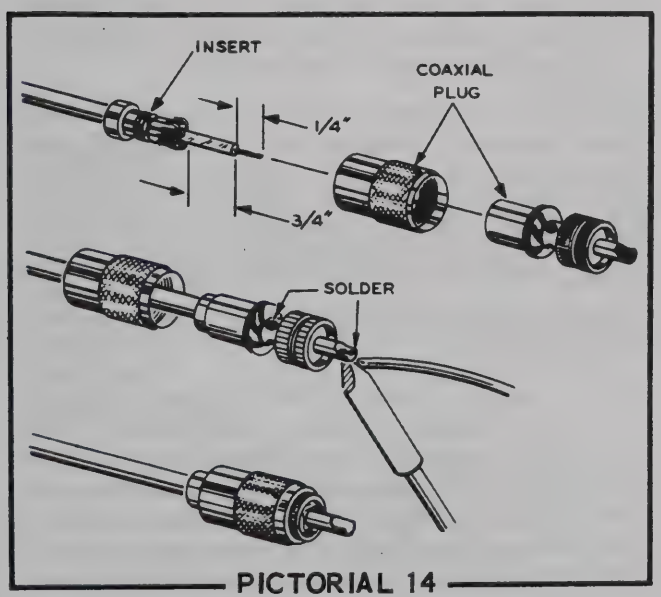

PICTORIAL 14

( ) Referring to Pictorial 15, prepare two 4 foot long cables to reach between the Linear Amplifier and the exciter. Use the small shielded cable with a phono plug connected at one end. It will be necessary to install the proper type of connector to the other ends of these cables to connect to the exciter. One of these cables connects between the ANT RELAY jack of the Linear Amplifier and the LINEAR RELAY jack of the exciter. The other cable connects between the ALC jack of the Linear Amplifier and the ALC input of the exciter, if your exciter has provisions for ALC input from a Linear Amplifier.

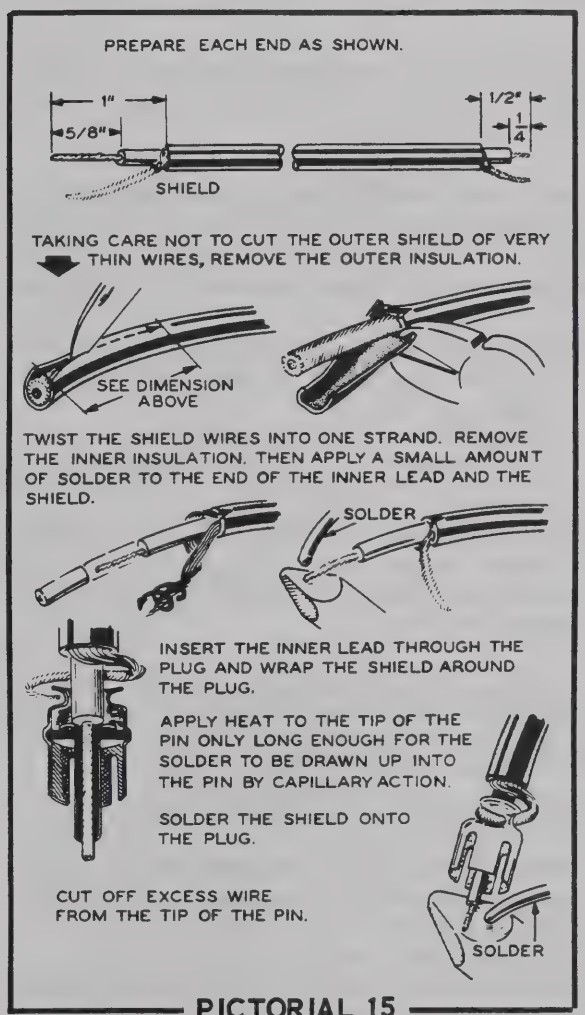
PREPARE EACH END AS SHOWN.
1"
5/8"
1/2"
1/4
SHIELD
TAKING CARE NOT TO CUT THE OUTER SHIELD OF VERY THIN WIRES, REMOVE THE OUTER INSULATION.
SEE DIMENSION ABOVE
TWIST THE SHIELD WIRES INTO ONE STRAND. REMOVE THE INNER INSULATION. THEN APPLY A SMALL AMOUNT OF SOLDER TO THE END OF THE INNER LEAD AND THE SHIELD.
SOLDER
INSERT THE INNER LEAD THROUGH THE PLUG AND WRAP THE SHIELD AROUND THE PLUG.
APPLY HEAT TO THE TIP OF THE PIN ONLY LONG ENOUGH FOR THE SOLDER TO BE DRAWN UP INTO THE PIN BY CAPILLARY ACTION.
SOLDER THE SHIELD ONTO THE PLUG.
CUT OFF EXCESS WIRE FROM THE TIP OF THE PIN.
SOLDER

PICTORIAL 15

INITIAL TEST

The input coils are factory adjusted and do not require any further alignment.

RESISTANCE CHECK

( ) The resistance between either anode clip and the chassis should measure approximately 180 KΩ after the meter stabilizes.

( ) The resistance between lug 3 of either tube socket V1 or V2 and the chassis should measure between 5000 Ω and 15,000 Ω.

If any difficulty is encountered in obtaining either of these resistance readings, refer to the In Case Of Difficulty section of the manual on Page 50.

CAUTION: LETHAL VOLTAGES ARE PRESENT IN THIS UNIT. USE EXTREME CARE WHEN MAKING ANY TESTS.

If at any time during the testing and operation the Linear Amplifier does not perform as described, unplug the Linear Amplifier line cord and refer to the In Case Of Difficulty section of the manual.

( ) Rotate all knobs to their fully counter-clockwise positions, except the TUNE knob which should be at its 9 o'clock position. Place the OFF-ON switch in the OFF position.

( ) Plug the line cord plug into the power source for which the unit is wired, either 120 volts or 240 volts AC.

( ) Push the OFF-ON switch to ON.

( ) Check to see that the tube filaments and meter pilot lamp light, and that the fan operates.

( ) Rotate the meter switch through all of its positions. There should not be a meter indication in any position, except for HV which should read approximately 2400 volts.

( ) Push the OFF-ON switch to OFF and unplug the line cord.

( ) To insure the discharge of the filter capacitors and reduce the shock hazard, short the anode clip of one of the tubes to the chassis, using a screwdriver with an insulated handle.

FINAL ASSEMBLY

Refer to Pictorial 16 for the following steps.

( ) Install the top plate, using #6 x 3/8" sheet metal screws.

( ) Remove the protective backing from a DANGER label and press it firmly in place on the top plate, as shown.

( ) Slide the chassis into the cabinet.

( ) Install rubber feet at the rear of the cabinet, using 6-32 x 3/4" screws and 3/8" flat steel washers.

( ) Install rubber feet and tapered spacers at the front of the cabinet, using 6-32 x 1-1/2" screws and 3/8" flat steel washers. NOTE: If you wish to have the Linear Amplifier set flat, extra 6-32 x 3/4" screws are supplied for mounting feet at the front only.

( ) Install the 8-32 x 1/4" screws in the holes at each side of the cabinet frame. These screws need only be loosened slightly to permit the cover to be opened.

NOTE: The blue and white identification label shows the Model Number and Production Series Number of your kit. Refer to these numbers in any communications with the Heath Company; this assures you that you will receive the most complete and up-to-date information in return.

( ) Install the identification label in the following manner:

1. Select a location for the label where it can easily be seen when needed, but will not show when the unit is in operation. This location might be on the rear panel or the top of the chassis, or on the rear or bottom of the cabinet.
2. Carefully peel away the backing paper. Then press the label into position.

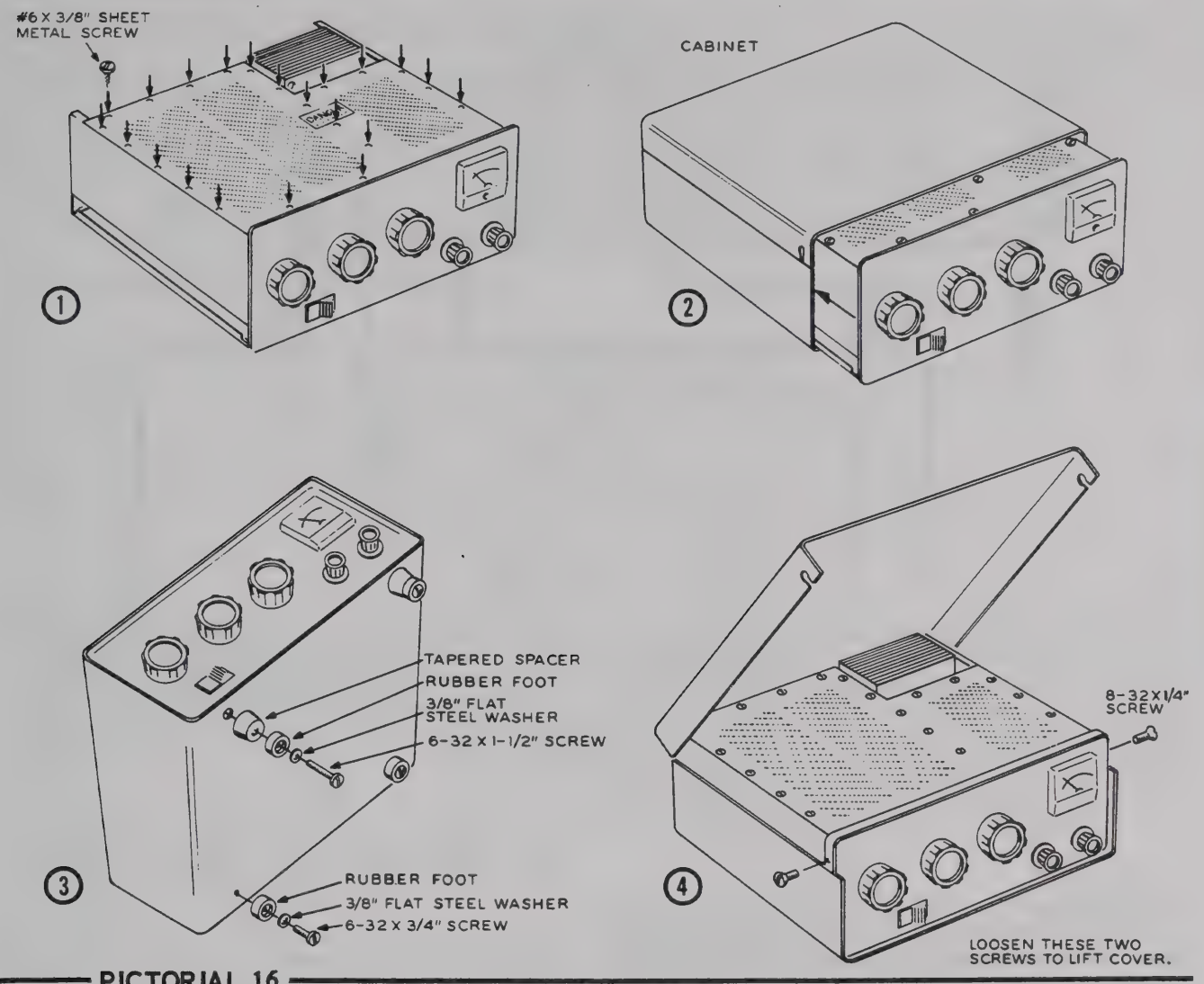

PICTORIAL 16

INSTALLATION

LOCATION

Although the Linear Amplifier has a built-in fan for cooling purposes, avoid excessively warm locations such as those near radiators and heating vents. The unit should be placed in a location that provides adequate space around it, permitting free air circulation through the cabinet openings.

POWER SOURCE

The Linear Amplifier is designed to operate from either a 120 volt or 240 volt AC, 60 cps power source, depending on the jumper installation on terminal strip S. The AC power outlet used should be properly fused and fed with not smaller than #14 wire.

The plug on the power cord for this kit is for standard 120 VAC outlets. For 240 VAC operation in the U.S.A. cut off this plug and replace it with a permanent plug that matches your 240 VAC receptacle. Be sure your power connection conforms with section 210-21 (b) of the National Electric Code, which reads in part:

> "Receptacles connected to circuits having different voltages, frequencies or types of current (AC or DC) on the same premises shall be of such design that attachment plugs used on such circuits are not interchangeable."

When you install a new plug, make sure it is connected according to your local electrical code. Keep in mind that the green line cord wire is connected to the amplifier chassis.

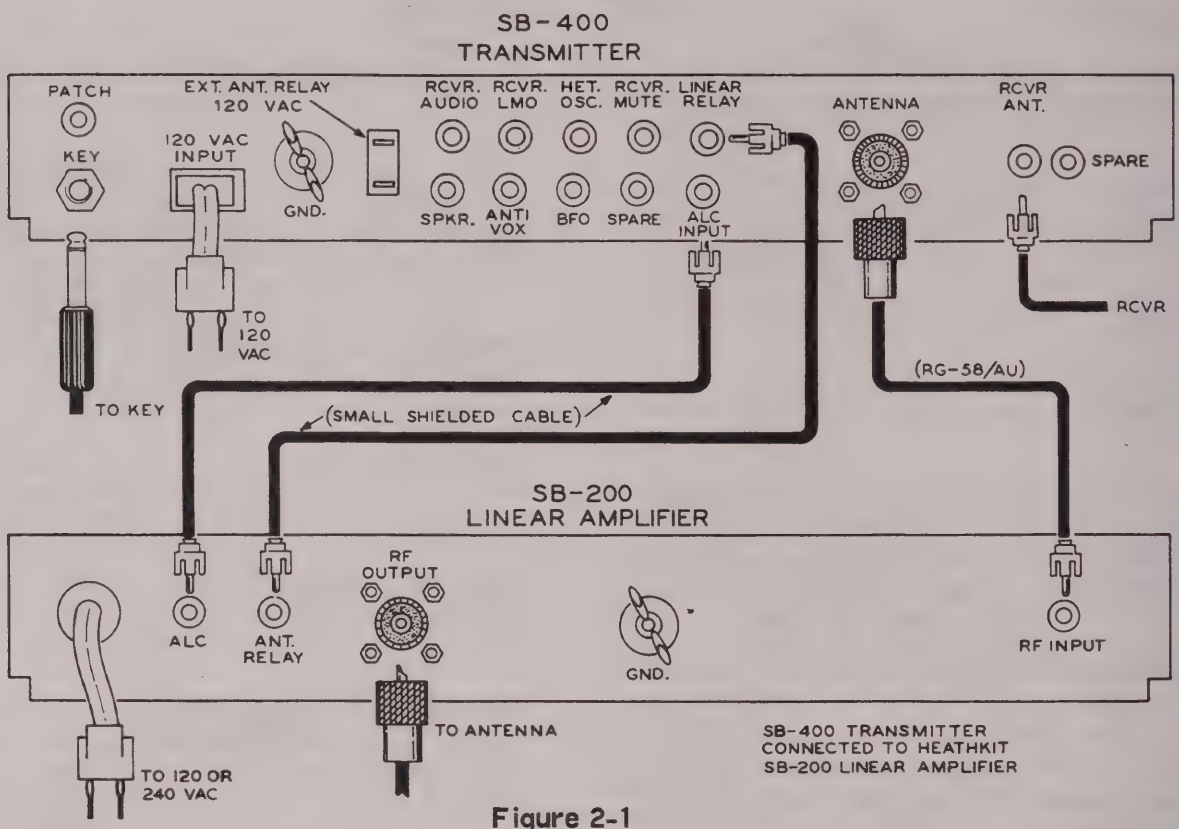

Figure 2-1

EXCITER

The Linear Amplifier can be driven by most commercial or home-built exciters with a power output of approximately 100 watts. The Heathkit SB-400 or SB-401 Transmitter or the SB-100 or SB-101 Transceiver is ideal for use with this Linear Amplifier.

Exciters in the 40 to 60 watt output class will not drive the Linear Amplifier to a full kilowatt, however, the Linear Amplifier will operate quite efficiently at lower power levels.

ANTENNA

The pi-network output is designed to work into a 50 to 75 Ω transmission line. Most commercial and home-built antennas are designed to be fed with 50 or 72 Ω coax. RG-8/U or RG-11/U coaxial cable is recommended for the transmission line, and every effort should be made to get the SWR of the antenna down to less than 2 to 1.

SWR MEASUREMENTS

( ) Connect the amplifier to the exciter and the antenna. Do not turn the Linear Amplifier ON, thus permitting the exciter to feed through the Linear Amplifier to the antenna.

( ) Place the Linear Amplifier Meter switch in the REL PWR position.

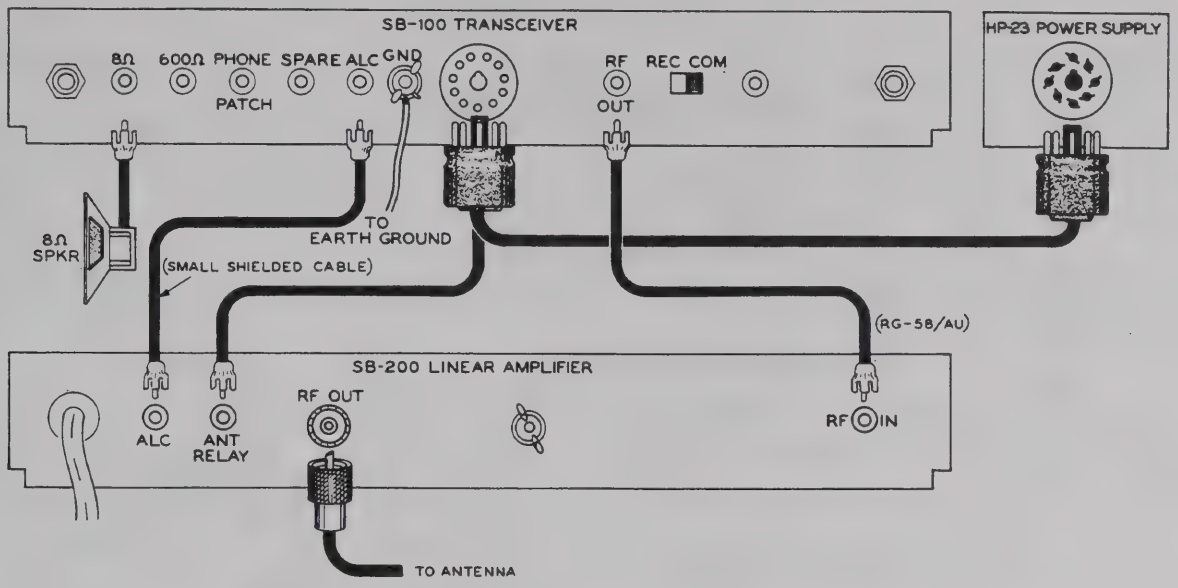

Figure 2-2

( ) Load the exciter to full output. The meter of the Linear Amplifier may be used for this purpose, as it will function in both the REL PWR and SWR positions without the Linear Amplifier being turned ON.

( ) Adjust the REL PWR SENS control of the Linear Amplifier for a SET (full-scale) indication on the meter.

( ) Turn the meter switch to SWR and read the standing wave ratio directly from the meter (1 to 3 scale).

NOTE: SWR checks can also be made with the Linear Amplifier operating at full power (1000 watts); however, due to the nonlinear characteristics of crystal diodes in the SWR circuit, the most accurate SWR readings are obtained at low power (70 to 100 watt) levels using only the exciter. If the exciter alone will not give full scale relative power readings, the Linear Amplifier may be used, however, limit the drive from the exciter to no more than necessary.

Figure 2-1 shows the Linear Amplifier connected to the Heathkit Model SB-400 Transmitter. Other transmitters or exciters would be connected to the Linear Amplifier in a similar manner.

The Heathkit Model SB-100 Transceiver can be connected to the Linear Amplifier as shown in Figure 2-2.

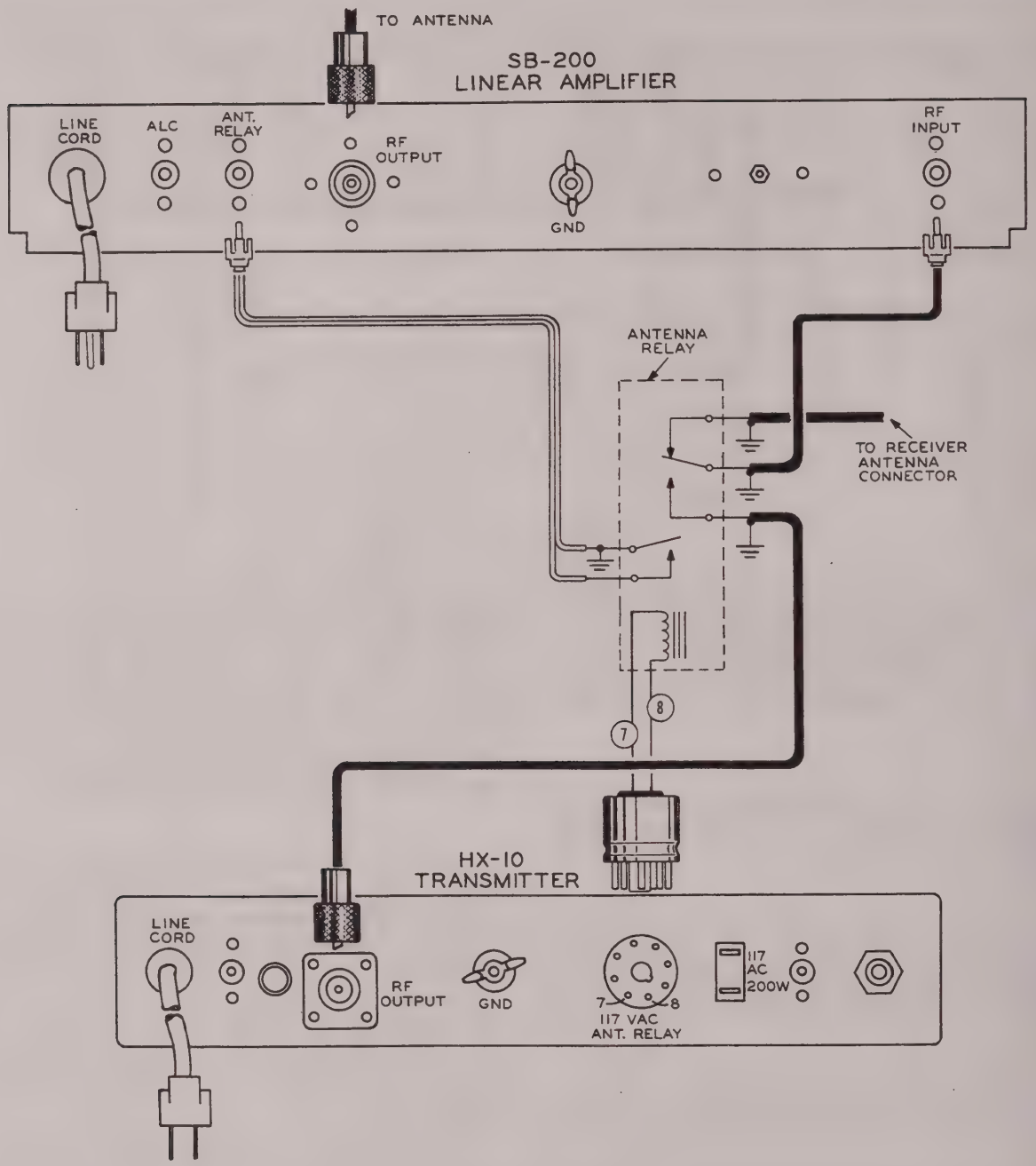

Figure 2-3

Observe in Figure 2-3 that an external antenna relay with extra contacts is necessary to obtain proper antenna switching, when connecting the Linear Amplifier to the Heathkit Model HX-10 Transmitter, and other transmitters not having a built-in antenna relay.

NOTE: The ANT RELAY jack of the Linear Amplifier must be grounded by the exciter to place the Linear Amplifier into operation. (See the Circuit Description.) This grounding is accomplished by the VOX relay or a transmit-receive switch in the exciter.

OPERATION

METER READINGS

Refer to Figure 2-4 and study the meter scale; note how it indicates for the various positions of the Meter switch.

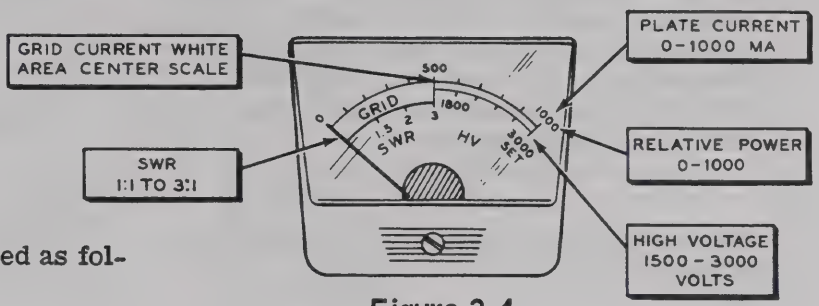

Figure 2-4

The meter scales should be interpreted as follows:

METER SWITCH POSITION	MEASURES	SCALE READING
GRID	Grid current	GRID (white area represents 0-100 ma)
PLATE	Plate current	0-1000 ma
REL PWR	Relative power output	0-1000
SWR	Standing wave ratio	1:1 to 3:1
HV	High voltage	1500-3000

OPERATING PROCEDURE

Make sure the Linear Amplifier is connected to your exciter properly.

( ) Set all switches and controls as follows:

SWITCH OR CONTROL	SWITCH OR CONTROL POSITION	COMMENTS
OFF-ON	OFF	Linear amplifier line cord connected to proper power source.
LOAD	4	Note desired position for antenna used and preset next time.
BAND	80 meters	Or desired band.
TUNE	80 meter segment	Or desired band segment.
METER	REL PWR	
REL PWR SENS	FULLY CLOCKWISE	Adjust to keep meter pointer on scale.

( ) Adjust the exciter for full CW output at the desired frequency. NOTE: With the Linear Amplifier turned OFF, the exciter output is fed through the Linear Amplifier to the RF OUTPUT jack. Also, the REL PWR and SWR functions of the Meter may be used to aid in tuning the exciter.

( ) Reduce the drive level of the exciter to a minimum.

( ) Place the Meter switch of the Linear Amplifier in the PLATE position and push the OFF-ON switch to ON. With no driver output from the exciter, the Linear Amplifier meter should show idling plate current of approximately 90 ma.

( ) Advance the drive level of the exciter for a 200 ma plate current indication on the meter of the Linear Amplifier.

( ) Quickly switch the Linear Amplifier Meter switch to REL PWR. If necessary, reduce the REL PWR SENS control setting to keep the meter pointer within the scale.

( ) Adjust the TUNE and LOAD controls for a maximum REL PWR meter indication.

( ) Increase the drive level from the exciter to full output.

( ) Again, adjust the TUNE and LOAD controls for a maximum REL PWR meter indication.

( ) Check the GRID and PLATE meter readings. If the grid reading is greater than midscale, reduce the drive level of the exciter to bring grid current within the GRID range of the meter. If the plate current reading is higher than 500 ma, reduce loading by turning the LOAD control counterclockwise.

This procedure of tuning the Linear Amplifier should take only a few seconds, after you go through it a few times. Note the LOAD control position so it can be preset next time a particular band is used.

The Linear Amplifier is now loaded for operation at maximum input power. If an oscilloscope is being used for monitoring, a display similar to that shown in Figure 2-5 should be obtained.

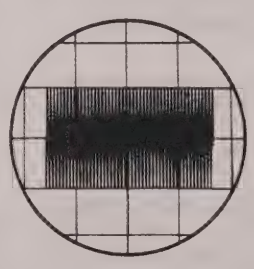

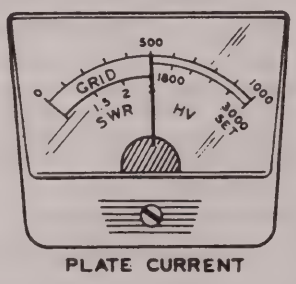

Oscilloscope pattern and plate meter reading resulting from carrier or "single tone" modulation. The meter indicates maximum or CW power input.

Figure 2-5

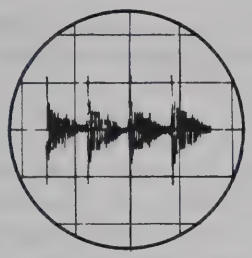

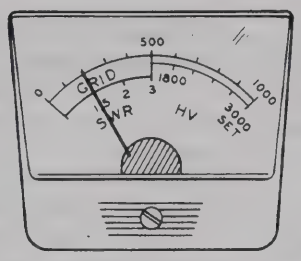

Oscilloscope pattern and plate meter reading resulting from voice modulation. Notice the peaks on the oscilloscope pattern. They are sharp, indicating a clean signal, and they will attain a height slightly greater than the "single tone" pattern of Figure 2-5, indicating maximum power input. NOTE: Plate current peak reading is approximately 1/2 or less of maximum "single tone" reading due to meter inertia and voice characteristics.

Figure 2-6

Turn the exciter to standby to remove drive from the Linear Amplifier.

The Linear Amplifier is now ready for SSB or CW transmission. An example of a proper oscilloscope pattern is shown in Figure 2-6. Note that there are sharp distinct peaks. The number of patterns or "christmas trees" will depend on the individual voice and the scope sweep speed. Set the scope for about a 30 cps sweep.

Note that the meter reading on voice peaks will not be high; however, the height of the oscilloscope pattern is slightly greater than that shown in Figure 2-5. This increase in peak power is due to dynamic characteristics of the power supply and allows the Linear Amplifier to develop approximately 20% greater peak envelope power for a given level of CW input. The meter will indicate only one-half or less of the single tone level, depending on the individual's voice, before "flat topping" occurs.

Figure 2-7 shows the same voice pattern but with extreme "flat topping." The oscilloscope shows that no more useful power is being developed. The meter reads higher, but only distortion is developed.

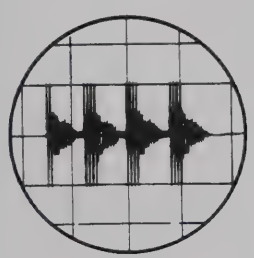

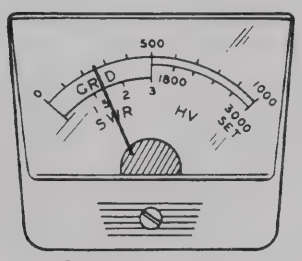

Oscilloscope pattern and plate meter reading resulting from over modulation. The meter reads higher, but the scope indicates peak flattening. Operation in this manner causes distortion and severe interference to adjacent frequencies.

Figure 2-7

IN CASE OF DIFFICULTY

1. Recheck the wiring. Trace each lead in colored pencil on the Pictorial as it is checked. It is frequently helpful to have a friend check your work. Someone who is not familiar with the unit may notice something consistently overlooked by the constructor.

2. It is interesting to note that about 90% of the kits that are returned for repair, do not function properly due to poor connections and soldering. Therefore, many troubles can be eliminated by reheating all connections to make sure that they are soldered as described in the Proper Soldering Techniques section of this manual.

3. Make sure that the tubes light up properly.

4. Check the tubes with a tube tester or by substitution of tubes of the same types and known to be good.

5. Check the values of the parts. Be sure that the proper part has been wired into the circuit, as shown in the Pictorial Diagrams and as called out in the wiring instructions.

6. Check for bits of solder, wire ends or other foreign matter which may be lodged in the wiring.

7. If, after careful checks, the trouble is still not located and a voltmeter is available, check voltage readings against those shown on the Schematic Diagram. NOTE: All voltage readings were taken with an 11 megohm input vacuum tube voltmeter. Voltages may vary as much as 10%.

8. A review of the Circuit Description will prove helpful in indicating where to look for trouble.

NOTE: In an extreme case where you are unable to resolve a difficulty, refer to the Service and Warranty sections of the "Kit Builders Guide", and to the "Factory Repair Service" information on Page 51 of this Manual.

FACTORY REPAIR SERVICE

You can return your completed kit to the Heath Company Service Department to have it repaired for a minimum service fee. (Kits that have been modified will not be accepted for repair.) Or, if you wish, you can deliver your kit to a nearby Heathkit Electronic Center. These centers are listed in your Heathkit catalog. NOTE: Do not include wooden cabinets, which are easily damaged in shipment, when returning equipment for service.

To be eligible for replacement parts under the terms of the warranty, equipment returned for factory repair service, or delivered to a Heathkit Electronic Center, must be accompanied by the invoice or the sales slip, or a copy of either. If you send the original invoice or sales slip, it will be returned to you.

If it is not convenient to deliver your kit to a Heathkit Electronic Center, please ship it to the factory at Benton Harbor, Michigan and observe the following shipping instructions:

Prepare a letter in duplicate, containing the following information:

- Your name and return address.
- Date of purchase.
- A brief description of the difficulty.
- The invoice or sales slip, or a copy of either.
- Your authorization to ship the repaired unit back to you C.O.D. for the service and shipping charges, plus the cost of parts not covered by the warranty.

Attach the envelope containing one copy of this letter directly to the unit before packaging, so that we do not overlook this important information. Send the second copy of the letter by separate mail to Heath Company, Attention: Service Department, Benton Harbor, Michigan 49022.

Check the equipment to see that all parts and screws are in place. Then, wrap the equipment in heavy paper. Place the equipment in a strong carton, and put at least THREE INCHES of resilient packing material (shredded paper, excelsior, etc.) on all sides, between the equipment and the carton. Seal the carton with gummed paper tape, and tie it with a strong cord. Ship it by prepaid express, United Parcel Service, or insured parcel post to:

Heath Company
Service Department
Benton Harbor, Michigan 49022

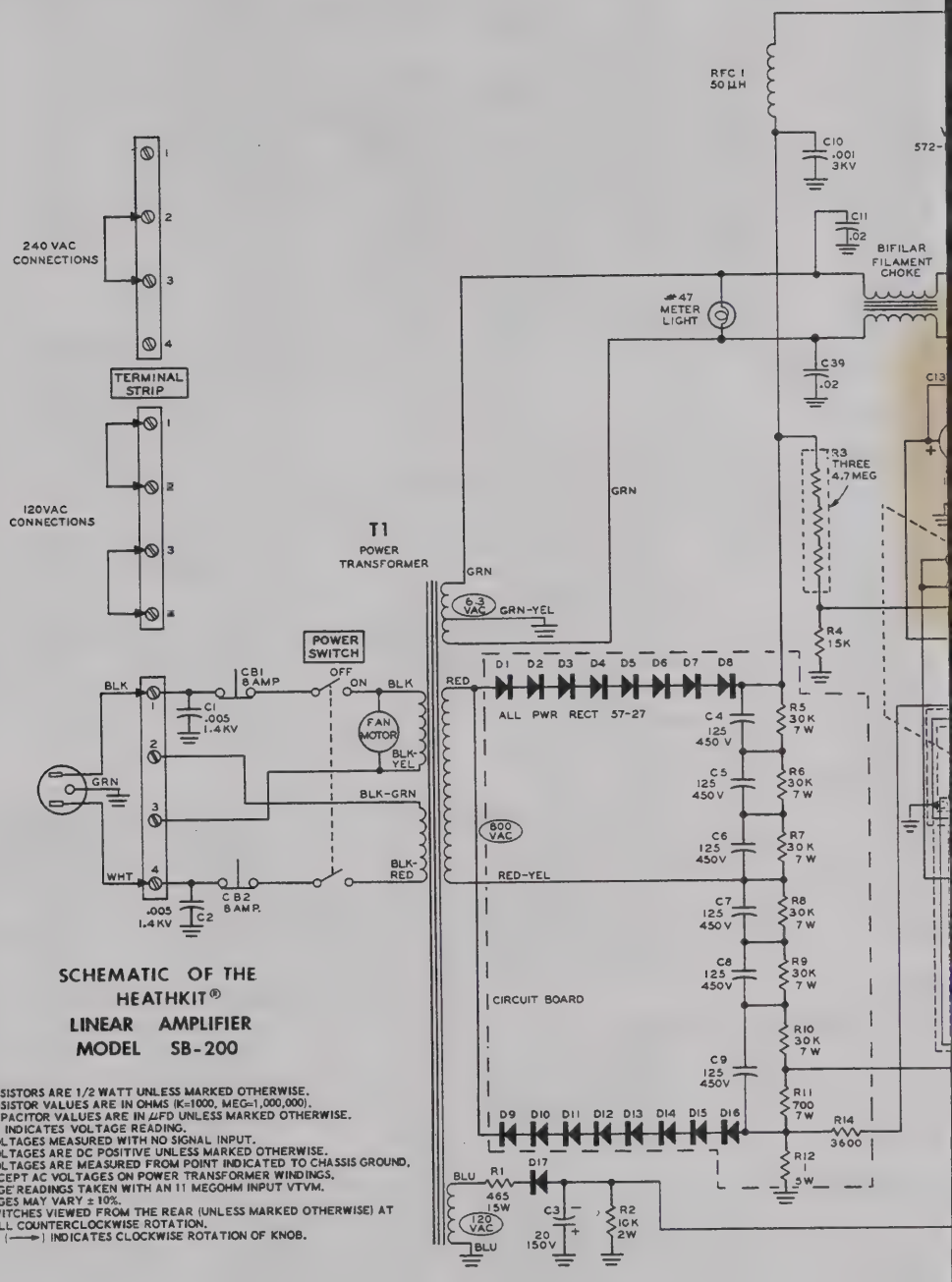

SCHEMATIC OF THE HEATHKIT® LINEAR AMPLIFIER MODEL SB-200

NOTES:
ALL RESISTORS ARE 1/2 WATT UNLESS MARKED OTHERWISE.
ALL RESISTOR VALUES ARE IN OHMS (K=1000, MEG=1,000,000).
ALL CAPACITOR VALUES ARE IN µFD UNLESS MARKED OTHERWISE.
(oval) INDICATES VOLTAGE READING.
ALL VOLTAGES MEASURED WITH NO SIGNAL INPUT.
ALL VOLTAGES ARE DC POSITIVE UNLESS MARKED OTHERWISE.
ALL VOLTAGES ARE MEASURED FROM POINT INDICATED TO CHASSIS GROUND, EXCEPT AC VOLTAGES ON POWER TRANSFORMER WINDINGS.
VOLTAGE READINGS TAKEN WITH AN 11 MEGOHM INPUT VTVM.
VOLTAGES MAY VARY ± 10%.
ALL SWITCHES VIEWED FROM THE REAR (UNLESS MARKED OTHERWISE) AT FULL COUNTERCLOCKWISE ROTATION.
ARROW (⟶) INDICATES CLOCKWISE ROTATION OF KNOB.

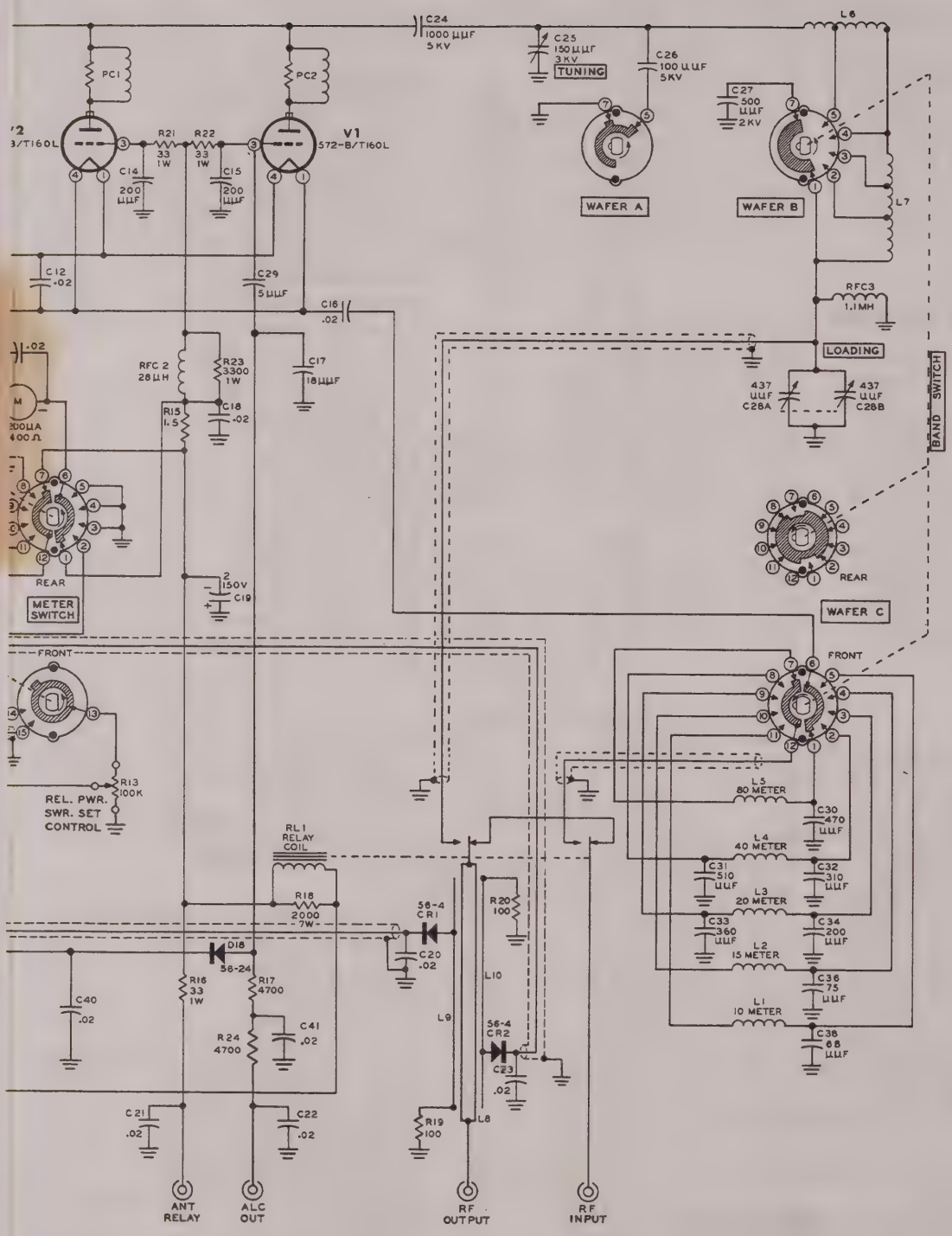
C24
1000 µµF
5 KV
C25
150 µµF
3 KV
TUNING
C26
100 µµF
5KV
L6
PC1
PC2
V1
572-B/T160L
R21
33
1W
R22
33
1W
C14
200
µµF
C15
200
µµF
C27
500
µµF
2KV
WAFER A
WAFER B
L7
C12
.02
C29
5 µµF
C16
.02
RFC3
1.1MH
LOADING
437
µµF
C28A
437
µµF
C28B
BAND SWITCH
RFC 2
28 µH
R23
3300
1W
C17
18 µµF
R15
1.5
C18
.02
REAR
METER
SWITCH
C19
150V
WAFER C
FRONT
REAR
FRONT
R13
100K
REL. PWR.
SWR. SET
CONTROL
RL1
RELAY
COIL
R18
2000
7W
D18
56-24
R16
33
1W
R17
4700
C40
.02
R24
4700
C41
.02
56-4
CR1
C20
.02
R20
100
L10
L9
56-4
CR2
C23
.02
L8
R19
100
C21
.02
C22
.02
L5
80 METER
C30
470
µµF
L4
40 METER
C31
510
µµF
C32
310
µµF
L3
20 METER
C33
360
µµF
C34
200
µµF
L2
15 METER
C36
75
µµF
L1
10 METER
C38
65
µµF
ANT
RELAY
ALC
OUT
RF
OUTPUT
RF
INPUT

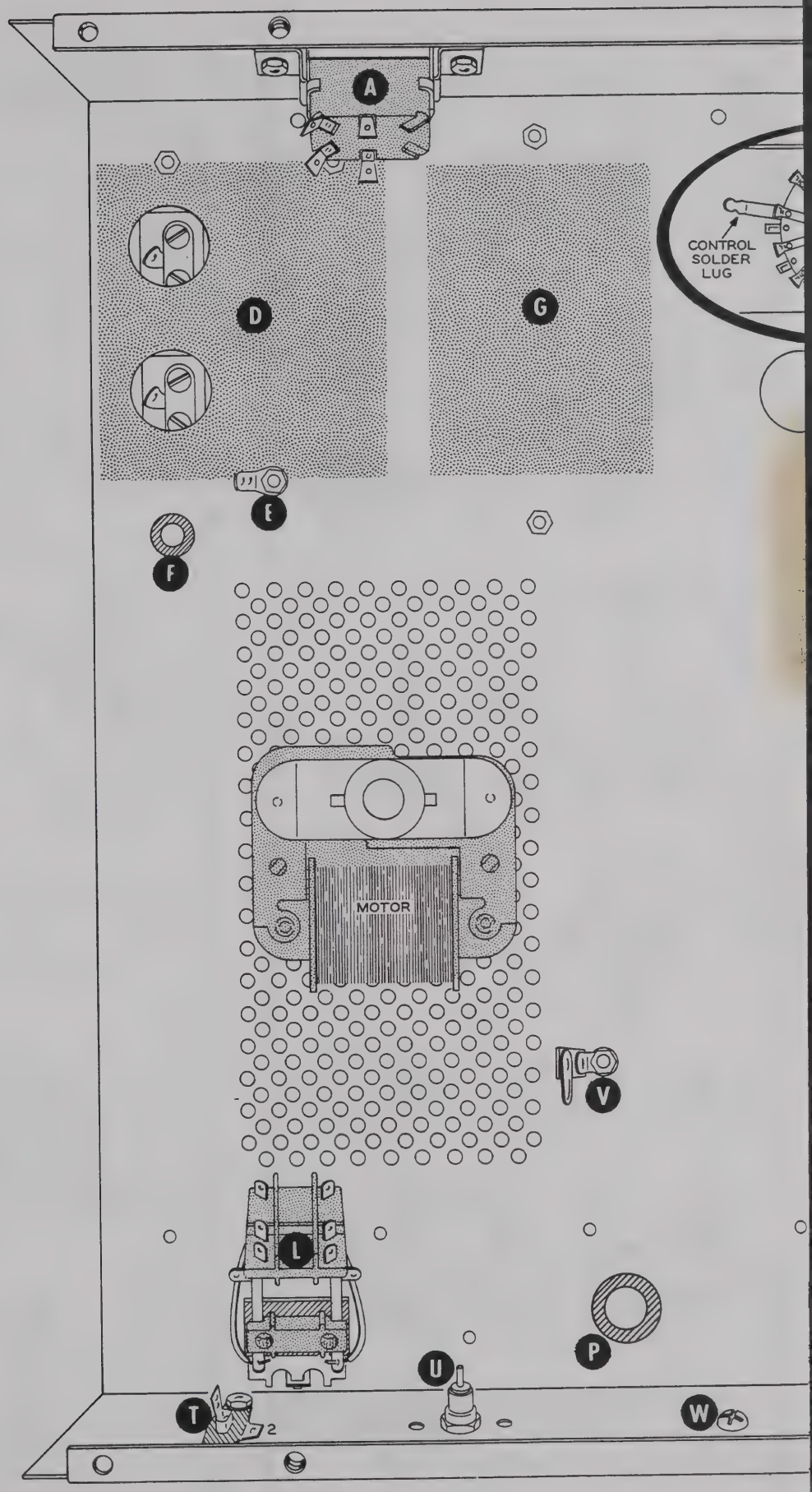

PICTOR

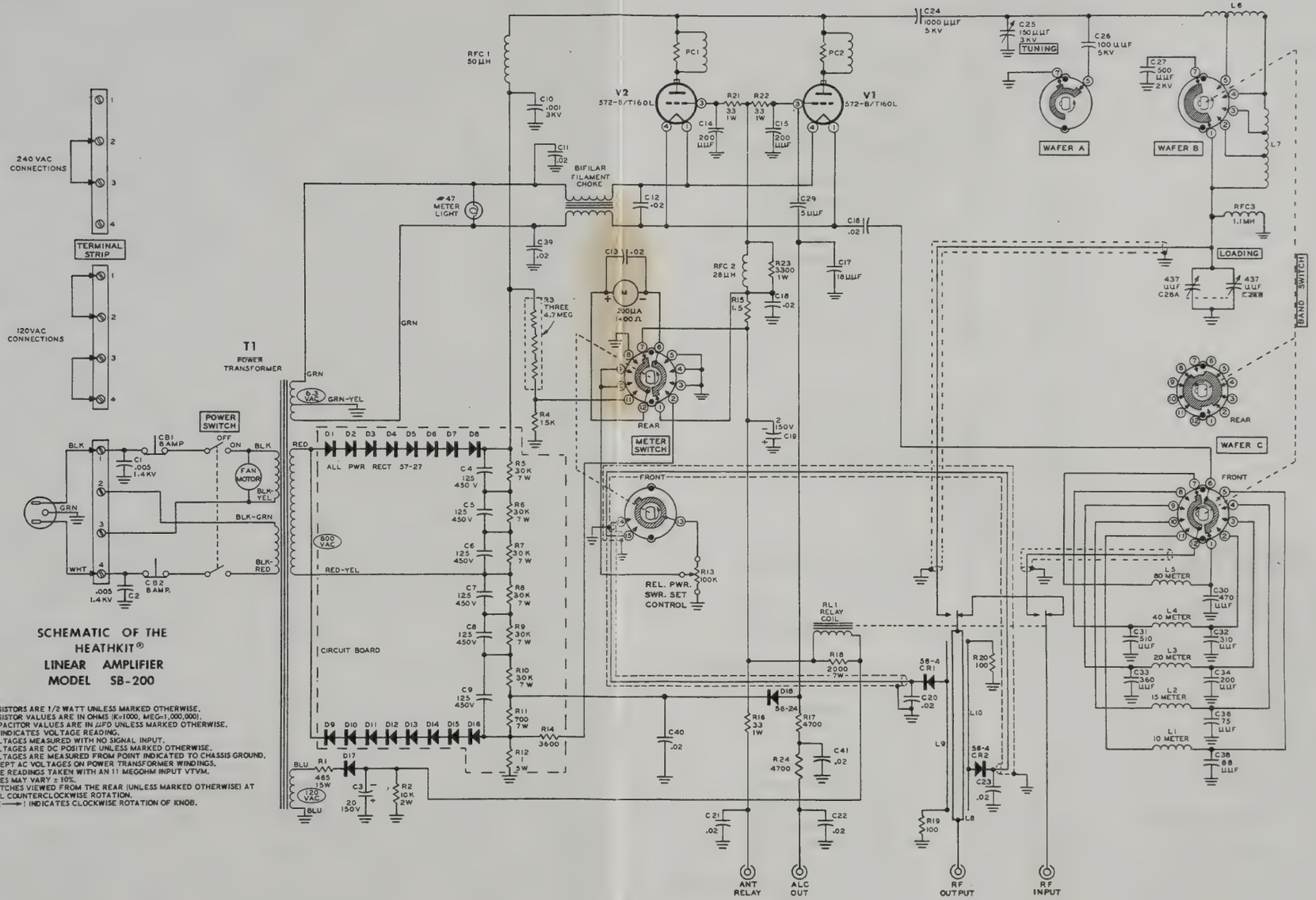

SCHEMATIC OF THE HEATHKIT® LINEAR AMPLIFIER MODEL SB-200

NOTES:
ALL RESISTORS ARE 1/2 WATT UNLESS MARKED OTHERWISE.
ALL RESISTOR VALUES ARE IN OHMS (K=1000, MEG=1,000,000).
ALL CAPACITOR VALUES ARE IN µFD UNLESS MARKED OTHERWISE.
⬭ INDICATES VOLTAGE READING.
ALL VOLTAGES MEASURED WITH NO SIGNAL INPUT.
ALL VOLTAGES ARE DC POSITIVE UNLESS MARKED OTHERWISE.
ALL VOLTAGES ARE MEASURED FROM POINT INDICATED TO CHASSIS GROUND, EXCEPT AC VOLTAGES ON POWER TRANSFORMER WINDINGS.
VOLTAGE READINGS TAKEN WITH AN 11 MEGOHM INPUT VTVM.
VOLTAGES MAY VARY ± 10%.
ALL SWITCHES VIEWED FROM THE REAR (UNLESS MARKED OTHERWISE) AT FULL COUNTERCLOCKWISE ROTATION.
ARROW (⟶) INDICATES CLOCKWISE ROTATION OF KNOB.

PARTS PICTORIAL

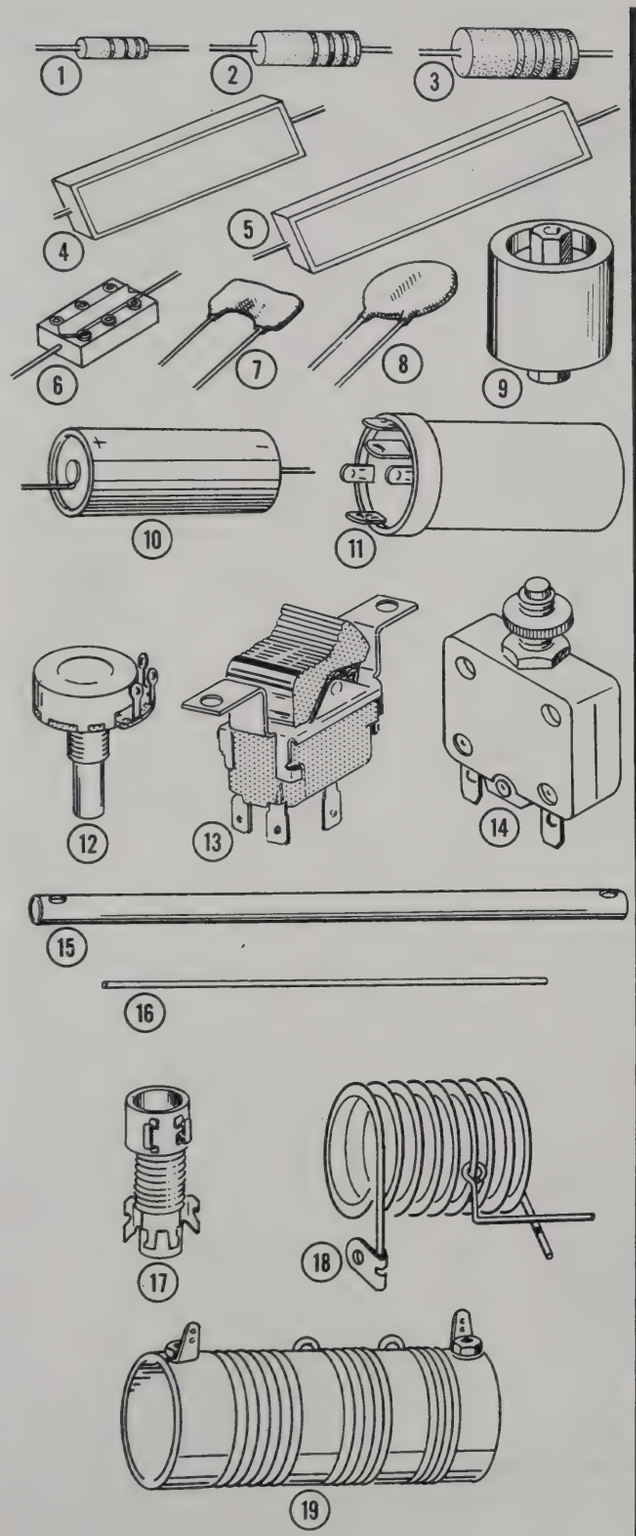

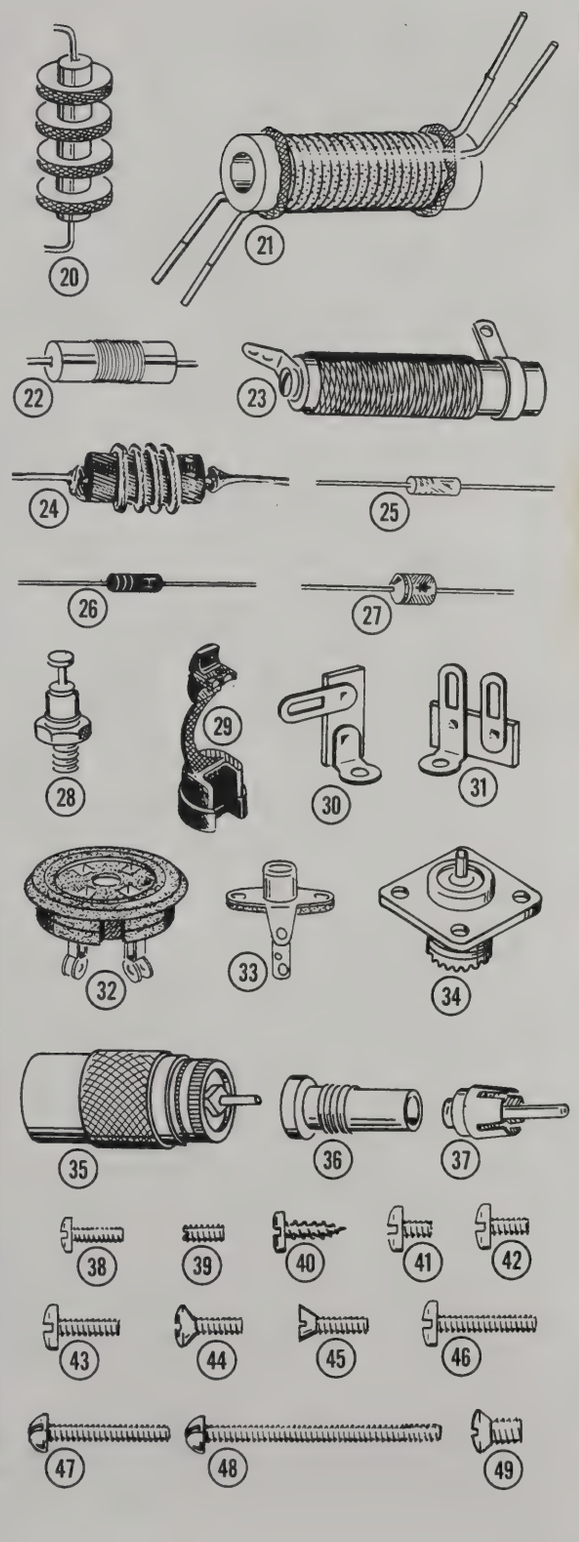

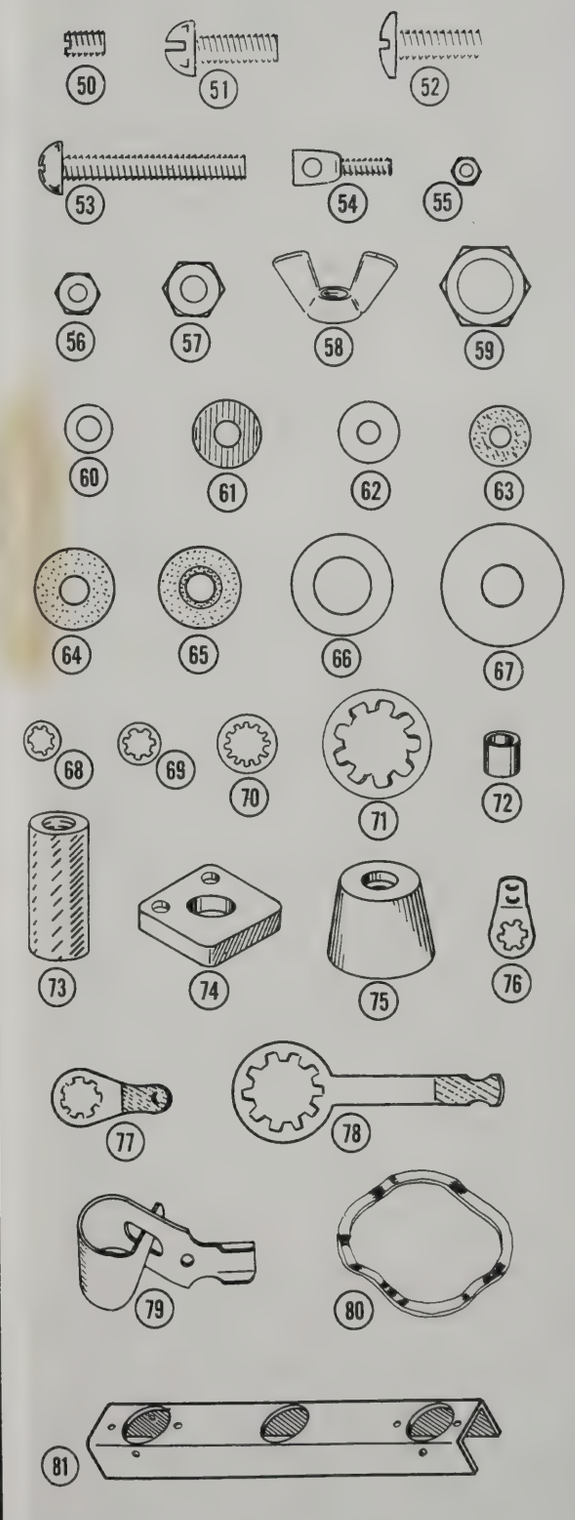

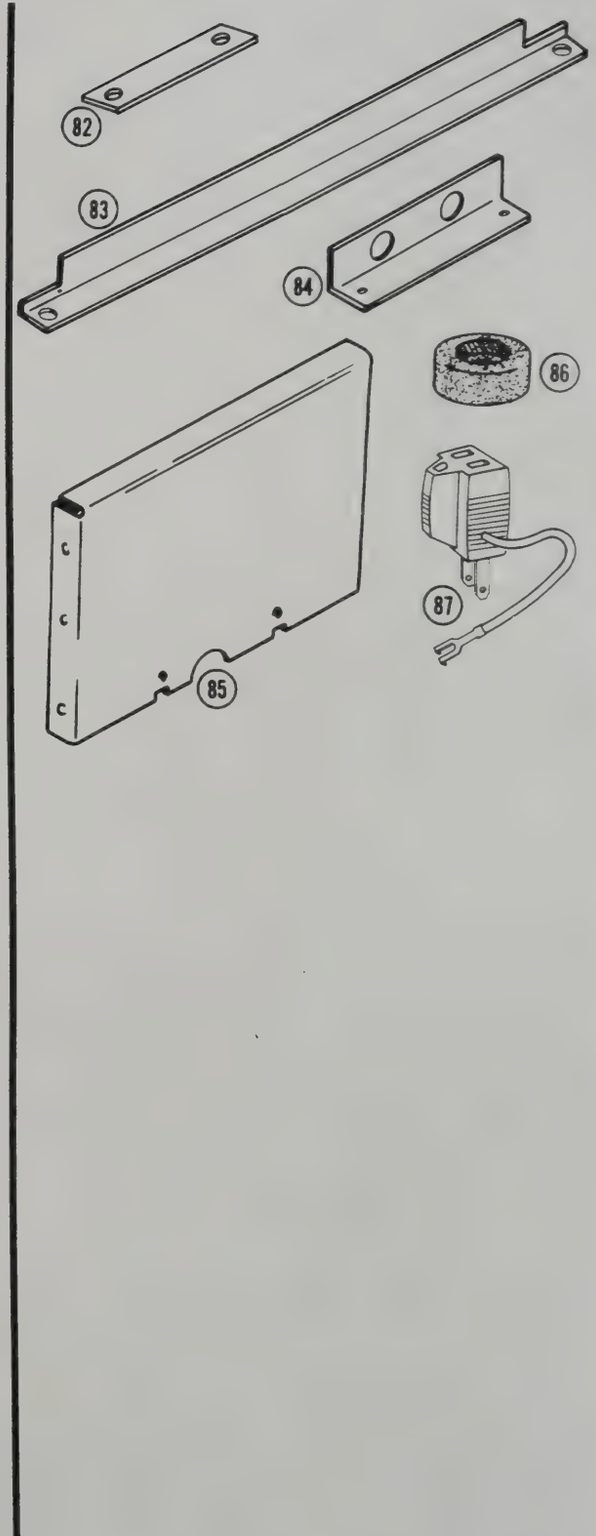

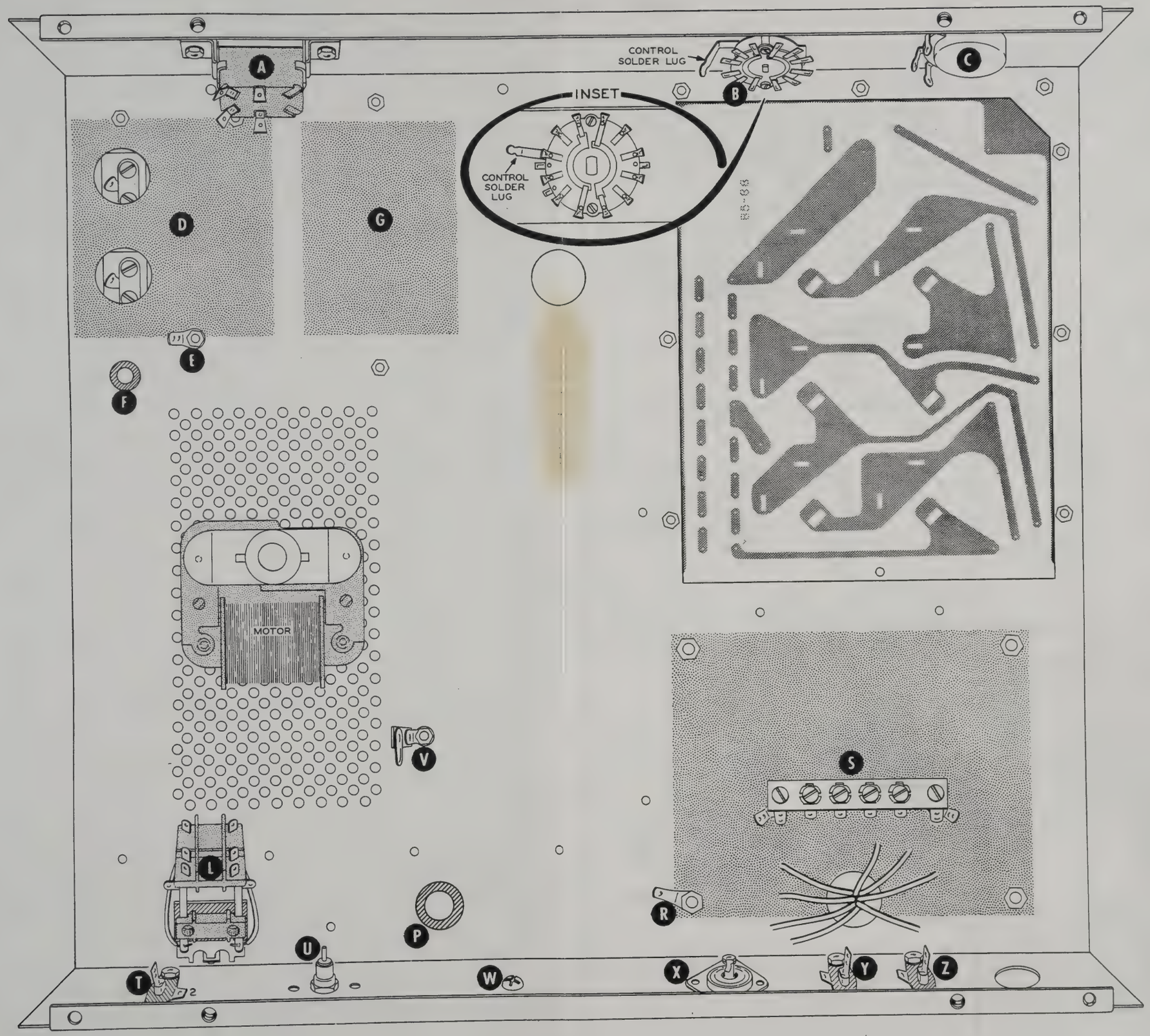
A
CONTROL SOLDER LUG
B
C
INSET
CONTROL SOLDER LUG
D
G
E
F
MOTOR
V
L
P
U
T
W
X
Y
Z
S
R

PICTORIAL 2

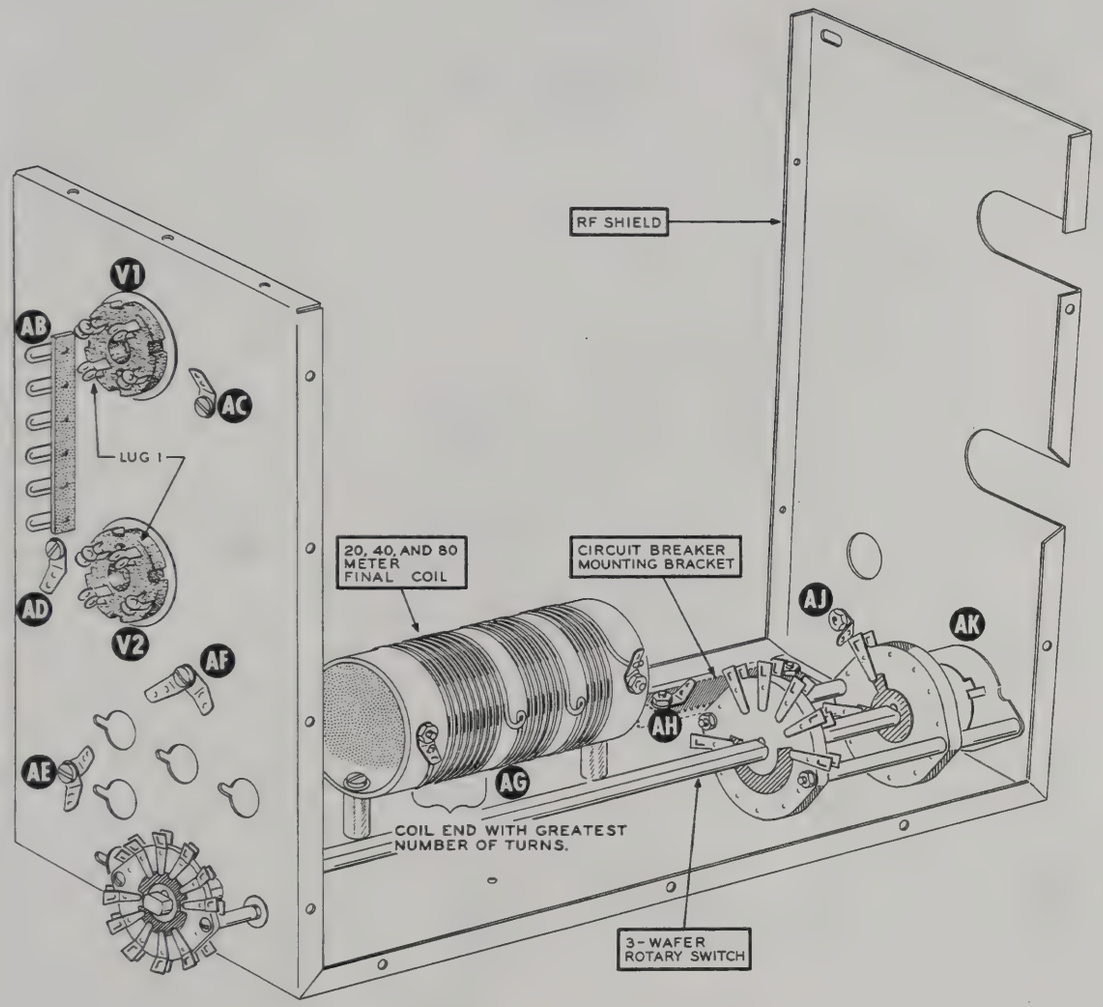
V1
AB
AC
LUG 1
AD
V2
AF
AE
20, 40, AND 80 METER FINAL COIL
CIRCUIT BREAKER MOUNTING BRACKET
RF SHIELD
AJ
AK
AH
AG
COIL END WITH GREATEST NUMBER OF TURNS.
3-WAFER ROTARY SWITCH

PICTORIAL 3

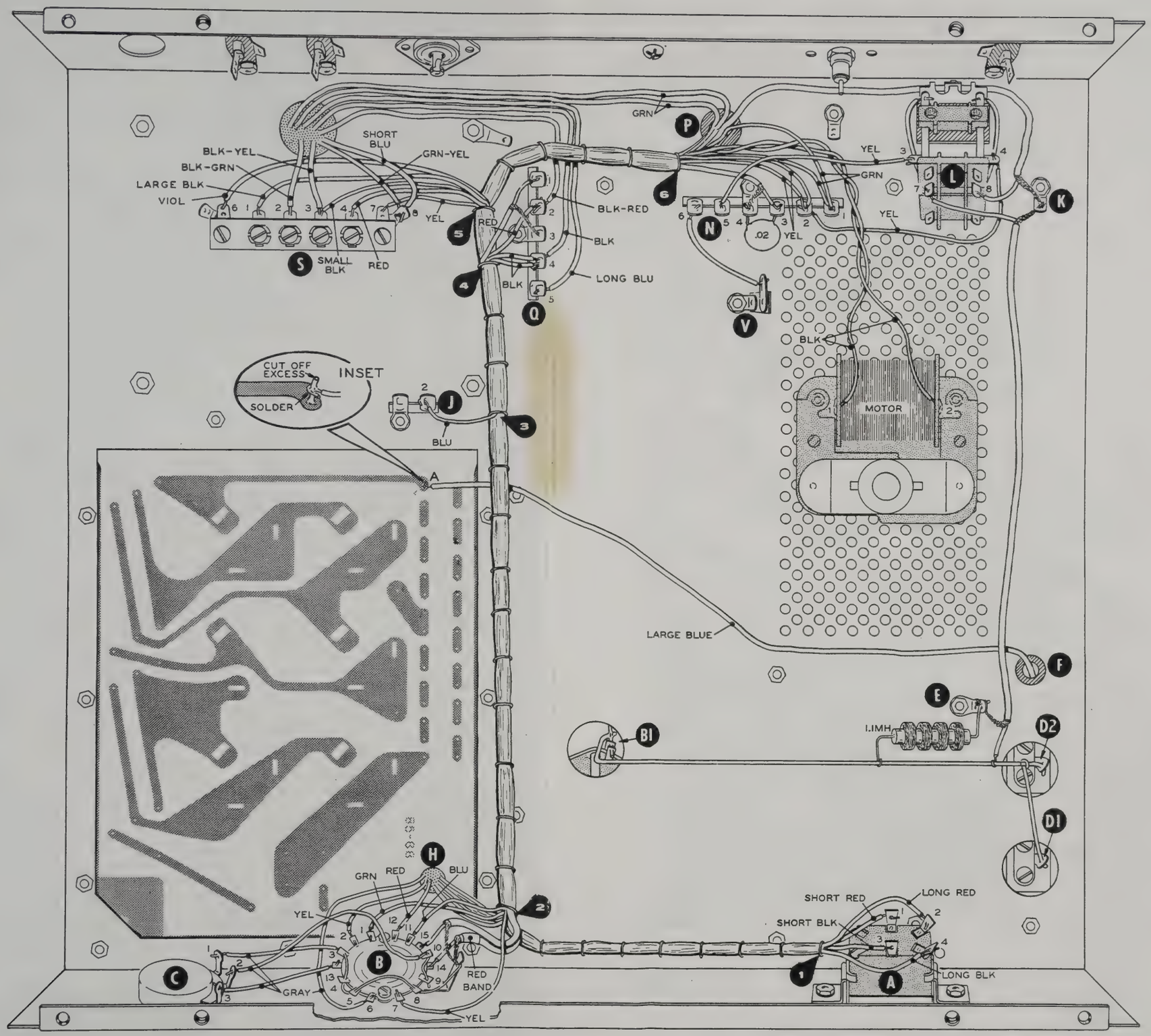
GRN
P
SHORT BLU
BLK-YEL
GRN-YEL
BLK-GRN
LARGE BLK
VIOL
YEL
RED
BLK-RED
BLK
LONG BLU
S
SMALL BLK
RED
5
4
Q
6
N
.02
YEL
V
YEL
GRN
L
K
BLK
MOTOR
CUT OFF EXCESS
INSET
SOLDER
J
BLU
3
A
LARGE BLUE
F
E
1.1MH
D2
B1
D1
H
GRN
RED
BLU
YEL
2
B
C
GRAY
RED BAND
YEL
SHORT RED
LONG RED
SHORT BLK
LONG BLK
1
A

PICTORIAL 6

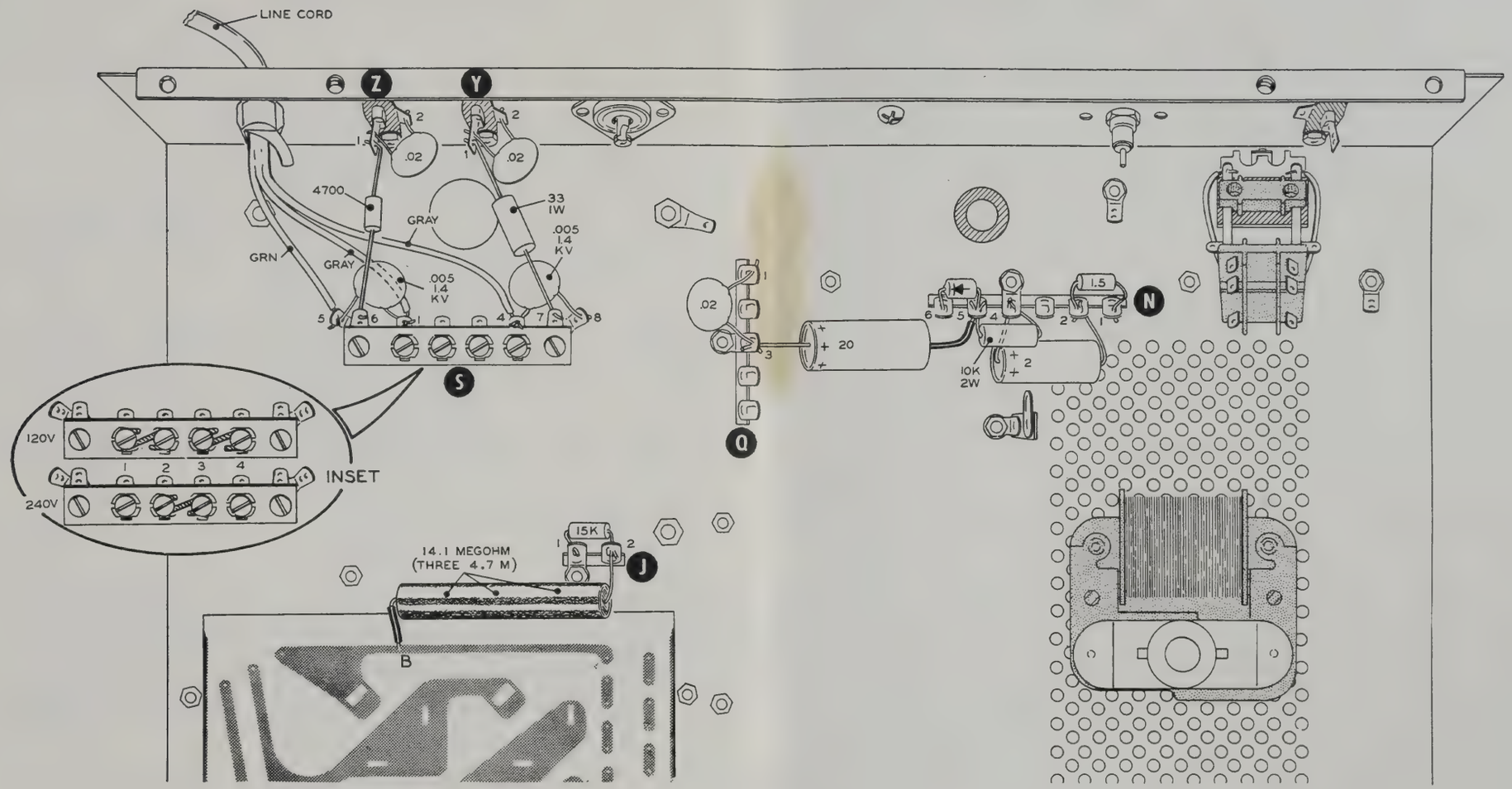
LINE CORD
Z
Y
.02
.02
4700
33
1W
GRAY
.005
1.4
KV
GRN
GRAY
.005
1.4
KV
S
120V
240V
INSET
14.1 MEGOHM
(THREE 4.7 M)
15K
J
B
Q
.02
20
1.5
N
10K
2W

PICTORIAL 7

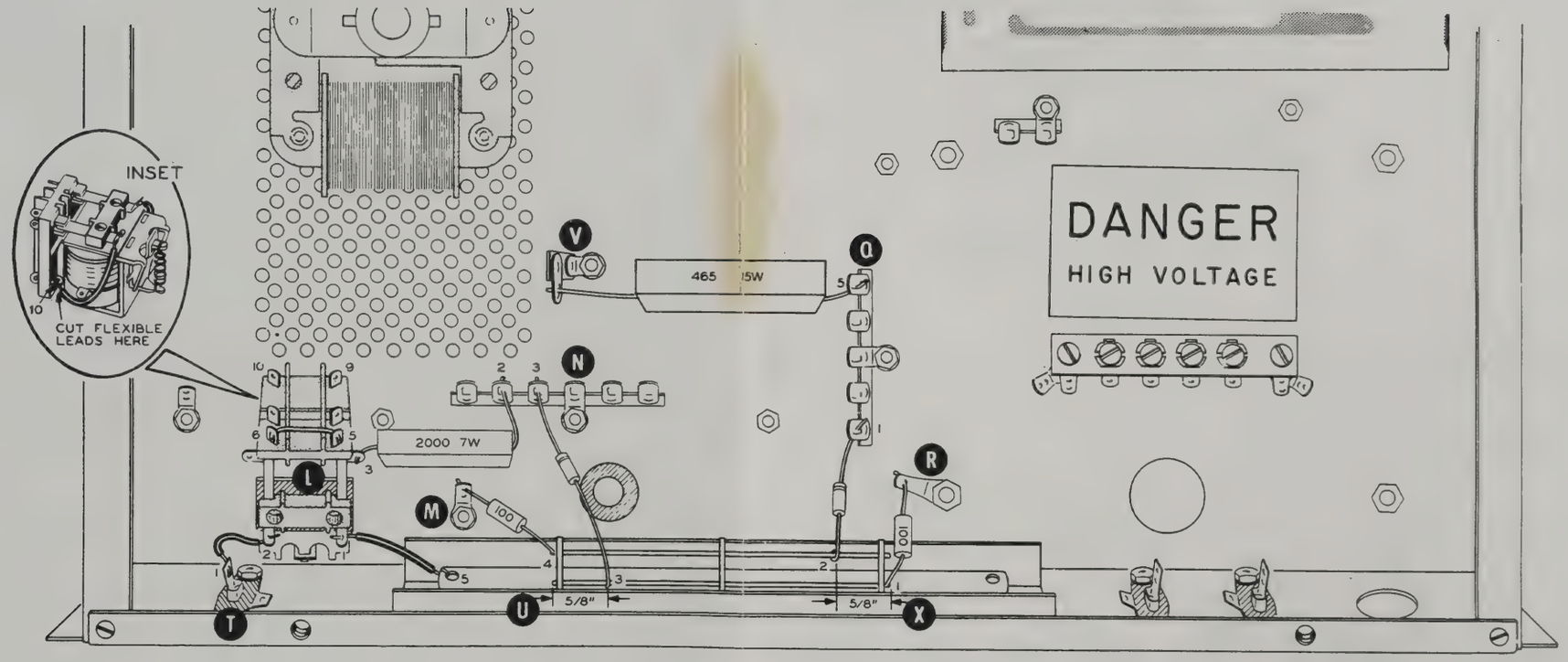
INSET
CUT FLEXIBLE LEADS HERE
DANGER
HIGH VOLTAGE
465 15W
2000 7W
100
5/8"
5/8"
V
Q
N
L
M
R
T
U
X

PICTORIAL 8

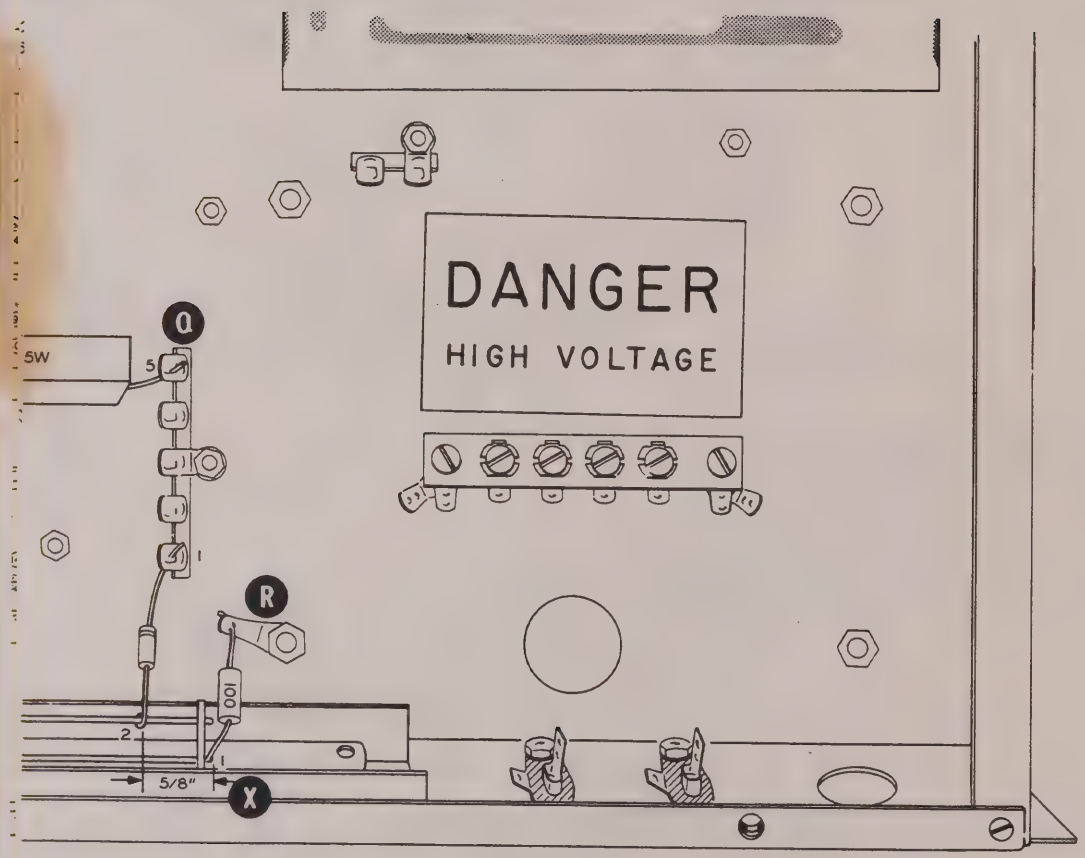

)RIAL 8

CUSTOMER SERVICE

REPLACEMENT PARTS

If you need a replacement part, please fill in the Parts Order Form that is furnished and mail it to the Heath Company. Or, if you write a letter, include the:

- **Part number** and **description** as shown in the **Parts List.**
- Model number and Series number from the blue and white label.
- Date of purchase.
- Nature of the defect.

Please do not return parts to the factory unless they are requested. Parts that are damaged through carelessness or misuse by the kit builder will not be replaced without cost, and will not be considered in warranty.

Parts are also available at the Heathkit Electronic Centers listed in your catalog. Be sure to provide the Heath part number. Bring in the original part when you request a warranty replacement from a Heathkit Electronic Center.

NOTE: Replacement parts are maintained specifically to repair Heathkit products. Parts sales for other reasons will be declined.

TECHNICAL CONSULTATION

Need help with your Heathkit? . . . . Self-Service? . . . . Construction? . . . . Operation? . . . . Call or write for assistance. You'll find our Technical Consultants eager to help with just about any technical problem except "customizing" for unique applications.

The effectiveness of our consultation service depends on the information you furnish. Be sure to tell us:

- The Model number and Series number from the blue and white label.
- The date of purchase.
- An exact description of the difficulty.
- Everything you have done in attempting to correct the problem.

Also include switch positions, connections to other units, operating procedures, voltage readings, and any other information you think might be helpful.

Please do not send parts for testing, unless this is specifically requested by our Consultants.

Hints: Telephone traffic is lightest at midweek. . .please be sure your Manual and notes are on hand when you call.

Heathkit Electronic Center facilities are also available for telephone or "walk-in" personal assistance.

REPAIR SERVICE

Service facilities are available, if they are needed, to repair your completed kit. (Kits that have been modified, soldered with paste flux or acid core solder, cannot be accepted for repair.)

If it is convenient, personally deliver your kit to a Heathkit Electronic Center. For warranty parts replacement, supply a copy of the invoice or sales slip.

If you prefer to ship your kit to the factory, attach a letter containing the following information directly to the unit:

- Your name and address.
- Date of purchase.
- Copies of all correspondence relevant to the service of the kit.
- A brief description of the difficulty.
- Authorization to return your kit C.O.D. for the service and shipping charges. (This will reduce the possibility of delay.)

Check the equipment to see that all screws and parts are secured. (Do not include any wooden cabinets or color television picture tubes, as these are easily damaged in shipment.) Place the equipment in a strong carton with at least THREE INCHES of *resilient* packing material (shredded paper, excelsior, etc.) on all sides. Use additional packing material where there are protrusions (control sticks, large knobs, etc.). If the unit weighs over 15 lbs., place this carton in another one with 3/4" of packing material between the two.

Seal the carton with reinforced gummed tape, tie it with a strong cord, and mark it "Fragile" on at least two sides. Remember, the carrier will not accept liability for shipping damage if the unit is insufficiently packed. Ship by prepaid express, United Parcel Service, or insured Parcel Post to:

Heath Company
Service Department
Benton Harbor, Michigan 49022

HEATH

Schlumberger

HEATH COMPANY • BENTON HARBOR, MICHIGAN

THE WORLD'S FINEST ELECTRONIC EQUIPMENT IN KIT FORM

LITHO IN U.S.A.

CONDENSED

Assembly
and
Operation
of the

HEATHKIT

LINEAR AMPLIFIER

MODEL SB-200

TABLE OF CONTENTS

Specifications 4

Introduction 5

Circuit Description 5

Construction Notes 7

Parts List 8

Proper Soldering Techniques 10

Circuit Board Wiring And Soldering 12

Step-By-Step Procedure 13

Step-By-Step Assembly

- Circuit Board Assembly 14
- Parts Mounting Chassis 15
- Parts Mounting - RF Shield 19
- Wiring RF Shield 22
- Wiring-Chassis Bottom 25
- Wiring-SWR Bridge 30
- Wiring-Chassis Top 32
- Final Wiring 36

Initial Test 42

Final Assembly 42

Installation 43

Operation 47

In Case Of Difficulty 50

Factory Repair Service 51

Schematic . . . . (fold-out from page) 51

Replacement Parts Price List
(fold-out from page) 52

HEATH COMPANY
BENTON HARBOR, MICHIGAN 49022

SPECIFICATIONS

Band Coverage	80, 40, 20, 15, and 10 meters.
Maximum Power Input	SSB: 1200 watts P.E.P. CW: 1000 watts.
Driving Power Required	100 watts.
Duty Cycle	SSB: continuous voice modulation. CW: 50% (key down time not to exceed 5 minutes).
Third Order Distortion	-30 db or better at 1000 watts P.E.P.
Output Impedance	50 to 75 Ω unbalanced; variable pi-output circuit. SWR not to exceed 2:1.
Input Impedance	52 Ω unbalanced; broad-band pretuned input circuit requires no tuning.
Meter Functions	0-100 ma grid current (white area). 0-1000 ma plate current. 0-1000 relative power. 1:1 to 3:1 SWR. 1500-3000 volts high voltage.
Front Panel Controls	LOAD: 1 to 10. TUNE: 80, 40, 20, 15, and 10 meters. BAND: 80, 40, 20, 15, and 10 meters. RELative Power SENSitivity. Meter Switch: GRID, PLATE, REL PWR, SWR, and HV. Power Switch: OFF, ON.
Tube Complement	Two 572-B (or two T-160-L) in parallel.
Power Requirements	120 volts AC at 16 amperes (maximum). 240 volts AC at 8 amperes (maximum).
Cabinet Size	14-7/8" wide x 6-5/8" high x 13-3/8" deep.
Net Weight	35 lbs.

The Heath Company reserves the right to discontinue instruments and to change specifications at any time without incurring any obligation to incorporate new features in instruments previously sold.

INTRODUCTION

With the increasing popularity of single sideband, suppressed-carrier phone transmission as a mode of amateur radio communication, more Amateurs are finding it possible to run higher transmitter power inputs than they could previously afford with conventional AM equipment. Since high-level modulating equipment is not necessary in single-sideband service, the cost of converting to high power is considerably reduced.

In keeping with this trend toward higher power in single-sideband service, the Heathkit Model SB-200 Linear Amplifier was designed to provide high power capability and complete versatility. Nearly any of the popular SSB and CW exciters available today can be used as a driver for this Amplifier.

The amplifier RF compartment is completely enclosed by perforated aluminum shielding. This type of construction increases stability and greatly decreases radiation that could cause TVI. The Amplifier is forced-air cooled to prolong tube life.

CIRCUIT DESCRIPTION

POWER SUPPLY

The power supply uses a power transformer which has dual-primary and triple-secondary windings. The primary winding may be connected for either 120 or 240 volt AC operation. The blower fan is connected across one-half of the primary winding. The transformer is protected against overload by reset type circuit breakers CB1 and CB2.

One secondary winding of the power transformer supplies 6.3 volts AC for the tube filaments and the pilot lamp in the meter. Another secondary winding is used with silicon diodes D1 through D16 and electrolytic capacitors C4 through C9 in a full-wave voltage-doubler circuit to provide plate voltage for the tubes. Resistors R5 through R10 insure that the voltage across each of the electrolytic capacitors is equalized; these resistors also serve as a bleeder network.

Resistor R11 at the bottom of the bleeder network provides an ALC threshold voltage of approximately 10 volts DC. Resistor R12 provides a means of measuring plate current independently, without also measuring bleeder current.

The third secondary winding, with resistors R1 and R2, capacitor C3, and silicon diode D17 forms a half-wave rectifier circuit. This circuit provides antenna relay control voltage and cut-off bias voltage for the grids of the amplifier tubes.

INPUT CIRCUIT

Tubes V1 and V2 are connected in parallel in a cathode-driven (grounded grid), class B configuration. Driving power for each band is coupled through a broad-band network, consisting of a coil and associated capacitors, and through capacitor C16 to the cathodes of tubes V1 and V2. Coils L1 through L5 with their associated capacitors are used to make up these impedance-matching networks, which reduce distortion and increase efficiency.

The correct input network, as well as the correct output circuit coil tap, for each band is selected with the Band switch. (The coils in the input networks are factory aligned and require no further adjustment.)

To keep the capacitance of the transformer filament winding from shunting the RF driving power to ground, the filament winding is isolated from the cathode circuit by a bifilar-wound filament choke. Also, this choke provides a cathode current path to ground.

OUTPUT CIRCUIT

High voltage is applied to the plates of tubes V1 and V2 through RF choke RFC1 and parasitic chokes PC1 and PC2. Tuning capacitor C25 is connected on the input side of tapped final coils L6 and L7. C26 is switched in parallel with the Tuning capacitor on the 80 meter band.

Loading capacitors C28A and C28B are on the output side of final coils L6 and L7. Capacitor C27 is switched in parallel with the Loading capacitor on the 80 meter band. Output power is applied through antenna change-over relay RL1 and through the SWR (standing wave ratio) bridge circuit to the RF Output connector. The SWR bridge consists of L8, L9, and L10, capacitors C20 and C23, resistors R19 and R20, and crystal diodes CR1 and CR2.

ANTENNA CHANGE-OVER AND CUTOFF BIAS CIRCUITS

Antenna change-over relay RL1 is controlled by a VOX (voice operated transmitter) relay in the exciter used with the Linear Amplifier. The relay in the exciter is connected to the Antenna Relay jack of the Linear Amplifier. When transmitting, the VOX relay grounds the Antenna Relay; when receiving, the Antenna Relay is ungrounded.

While receiving, cut-off bias voltage from the power supply bias circuit is applied through the coil of relay RL1, and through resistor R15 and choke RFC2, to the grids of tubes V1 and V2. The Antenna Relay jack is ungrounded and no current will flow through the coil of relay RL1, which allows the relay to remain open. Thus it connects the RF Output jack (antenna) to the RF Input jack of the Linear Amplifier.

When transmitting, the Antenna Relay jack is grounded by the VOX relay of the exciter. This allows current to flow through the coil of relay RL1 and actuate the relay. When actuated, relay RL1 connects the RF Output jack (antenna) to the output circuit of the Linear Amplifier. Grounding the Antenna Relay jack also grounds the grids of tubes V1 and V2 through RFC2, and resistors R15 and R16. This removes all but -2 volts from the grids of the tubes. This -2 volts is operating bias, which limits resting plate current to approximately 90 milliamperes.

When operating with the Linear Amplifier turned OFF, there is no bias voltage to operate relay RL1 and the RF Input jack remains connected to the antenna, through RF Output jack. This permits low power operation directly from the exciter into the antenna without changing any cables. Because silicon rectifiers and instant-heating-filament tubes are used in the Linear Amplifier, you can go to high power operation as soon as the Linear Amplifier is turned ON.

METERING CIRCUITS

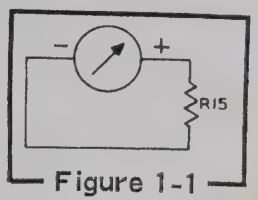

Figure 1-1

GRID - Figure 1-1

In the Grid position of the meter switch, the meter is connected to measure the voltage across grid resistor R15. The voltage across this resistor is directly proportional to the grid current which flows through it; therefore, the meter will indicate grid current. Since grid current in tubes V1 and V2 should not exceed 100 ma, only half (white area) of the 0-200 ma meter scale is used for this measurement.

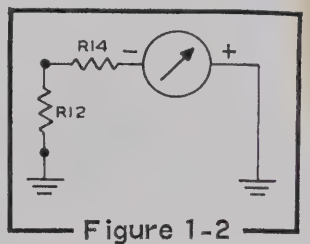

Figure 1-2

PLATE - Figure 1-2

Plate current is read on the top scale of the meter. This scale is divided into 20 ma divisions from 0 to 1000 ma. Plate current readings are obtained by measuring the voltage across resistor R12, through series resistor R14.

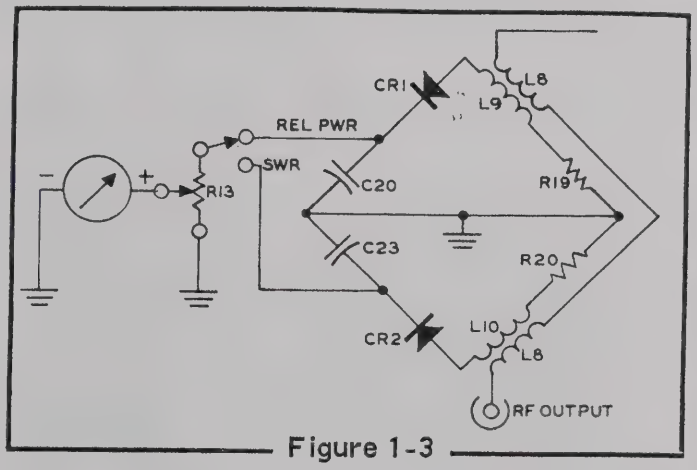

Figure 1-3

REL PWR And SWR - Figure 1-3

Relative Power and Standing Wave Ratio are measured with a bridge circuit, consisting of coils L8, L9, and L10, diodes CR1 and CR2, resistors R19 and R20, and capacitors C20 and

C23. Relative Power Sensitivity control R13 sets the sensitivity of the meter. The REL PWR position is used when adjusting the TUNE and LOAD controls for maximum output of the Linear Amplifier; this meter function is also used to establish a "set" meter level for making SWR measurements.

Because coil L8 of the bridge circuit is connected in series between the RF Input and RF Output jacks when the Linear Amplifier is turned OFF, the meter can be used to measure REL PWR and SWR when operating the exciter alone. This method of checking SWR is recommended for accurately determining antenna performance.

In the bridge circuit, RF current is inductively and capacitively coupled from L8, to L9 and L10. The RF currents in L9 and L10 are rectified by diodes CR1 and CR2, and then filtered by capacitors C20 and C23.

For REL PWR measurements, the rectified RF voltage from L9 is applied to the meter. For SWR (reflected power) measurements, the rectified RF voltage from L10 is applied to the meter.

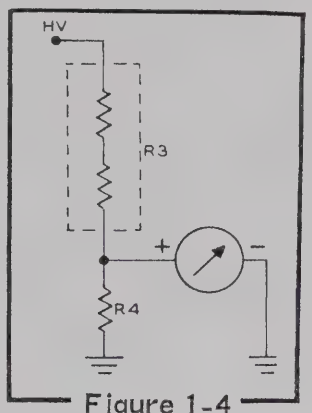

Figure 1-4

HV - Figure 1-4

High Voltage is measured with a voltage divider network consisting of resistors R3 and R4. The voltage across resistor R4 is applied to the meter. High voltage is read on the lower right-hand meter scale (1500 to 3000).

CONSTRUCTION NOTES

This manual is supplied to assist you in every way to complete your kit with the least possible chance for error. The arrangement shown is the result of extensive experimentation and trial. If followed carefully, the result will be highly stable and dependable performance. We suggest that you retain the manual in your files for future reference, both in the use of the equipment and for its maintenance.

UNPACK THE KIT CAREFULLY AND CHECK EACH PART AGAINST THE PARTS LIST. In so doing, you will become acquainted with the parts. Refer to the information on the inside covers of the manual to help you identify the components. If some shortage or parts damage is found in checking the Parts List, please read the Replacements section and supply the information called for therein.

Resistors generally have a tolerance rating of 10% unless otherwise stated in the Parts List. Tolerances on capacitors are generally even greater. Limits of +100% and -20% are common for electrolytic capacitors.

We suggest that you do the following before work is started:

1. Lay out all parts so that they are readily available.
2. Provide yourself with good quality tools. Basic tool requirements consist of a screwdriver with a 1/4" blade; a small screwdriver with a 1/8" blade; phillips screwdriver; long-nose pliers; wire cutters, preferably separate diagonal cutters; a penknife or a tool for stripping insulation from wires; a soldering iron (or gun) and rosin core solder. A set of nut drivers and a nut starter, while not necessary, will aid extensively in construction of the kit.

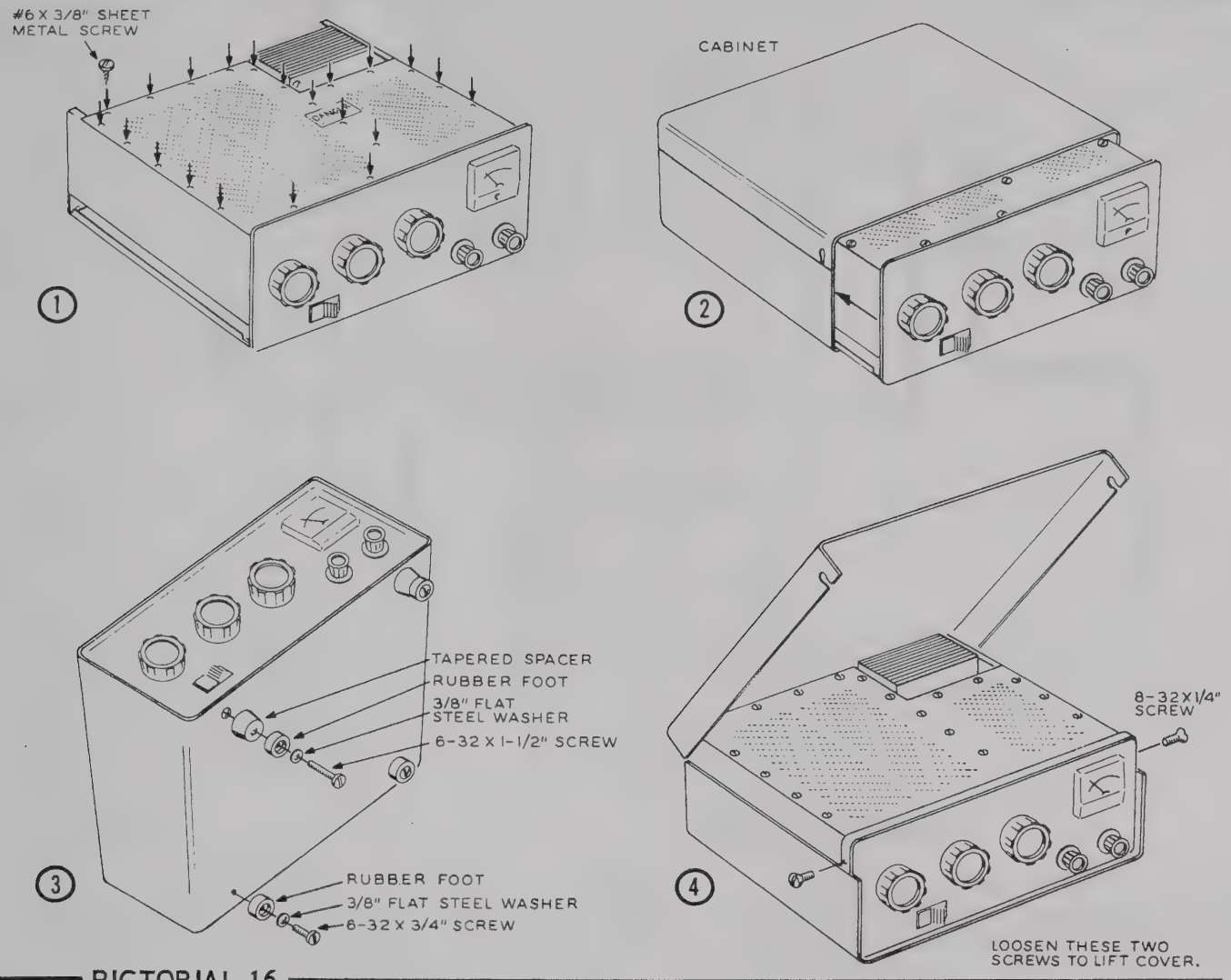

PICTORIAL 16

INSTALLATION

LOCATION

Although the Linear Amplifier has a built-in fan for cooling purposes, avoid excessively warm locations such as those near radiators and heating vents. The unit should be placed in a location that provides adequate space around it, permitting free air circulation through the cabinet openings.

POWER SOURCE

The Linear Amplifier is designed to operate from either a 120 volt or 240 volt AC, 60 cps power source, depending on the jumper installation on terminal strip S. The AC power outlet used should be properly fused and fed with not smaller than #14 wire.

EXCITER

The Linear Amplifier can be driven by most commercial or home-built exciters with a power output of approximately 100 watts. The Heathkit SB-400 or SB-401 Transmitter or the SB-100 or SB-101 Transceiver is ideal for use with this Linear Amplifier.

Exciters in the 40 to 60 watt output class will not drive the Linear Amplifier to a full kilowatt, however, the Linear Amplifier will operate quite efficiently at lower power levels.

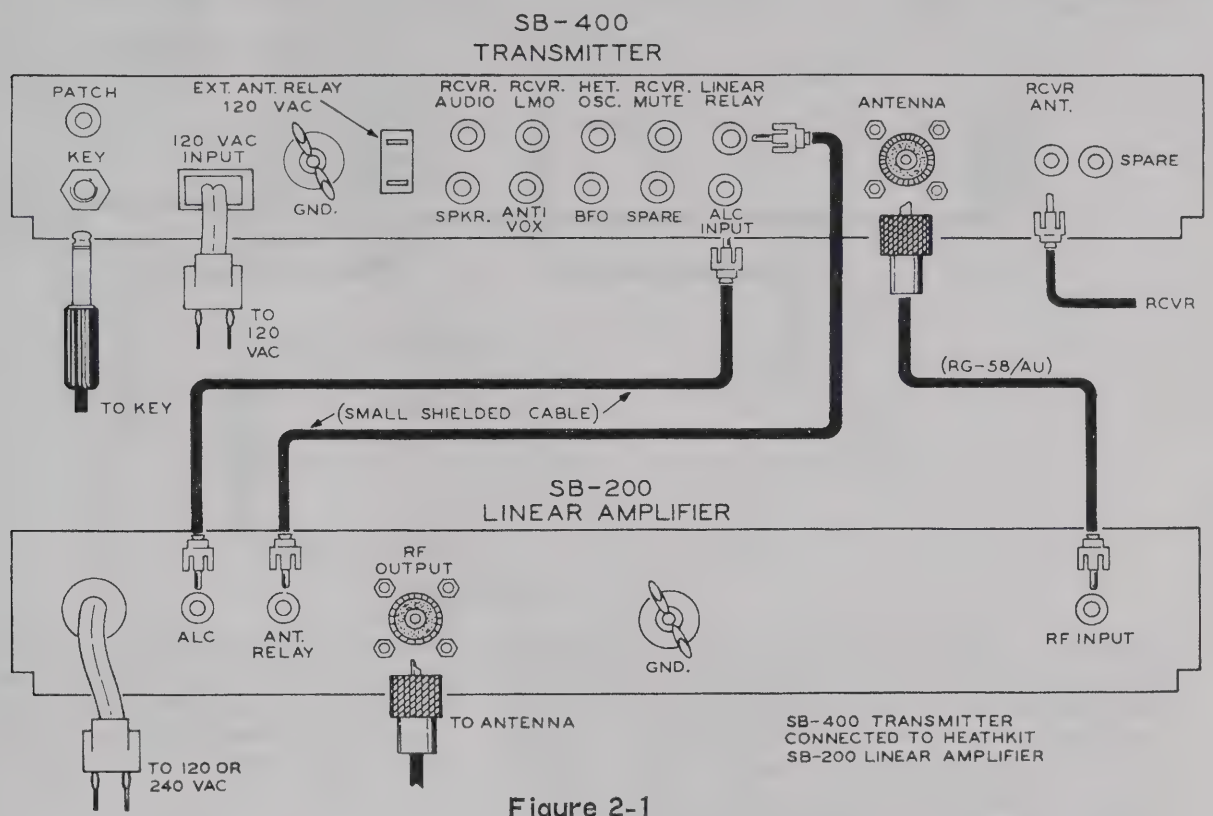

Figure 2-1

ANTENNA

The pi-network output is designed to work into a 50 to 75 Ω transmission line. Most commercial and home-built antennas are designed to be fed with 50 or 72 Ω coax. RG-8/U or RG-11/U coaxial cable is recommended for the transmission line, and every effort should be made to get the SWR of the antenna down to less than 2 to 1.

SWR MEASUREMENTS

( ) Connect the amplifier to the exciter and the antenna. Do not turn the Linear Amplifier ON, thus permitting the exciter to feed through the Linear Amplifier to the antenna.

( ) Place the Linear Amplifier Meter switch in the REL PWR position.

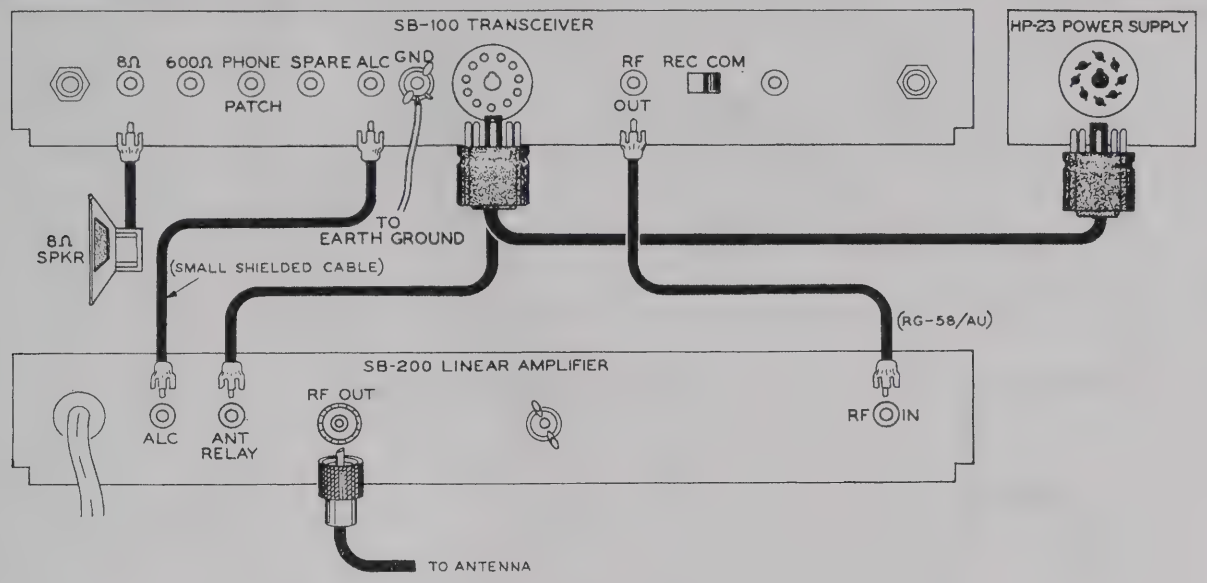

Figure 2-2

( ) Load the exciter to full output. The meter of the Linear Amplifier may be used for this purpose, as it will function in both the REL PWR and SWR positions without the Linear Amplifier being turned ON.

( ) Adjust the REL PWR SENS control of the Linear Amplifier for a SET (full-scale) indication on the meter.

( ) Turn the meter switch to SWR and read the standing wave ratio directly from the meter (1 to 3 scale).

NOTE: SWR checks can also be made with the Linear Amplifier operating at full power (1000 watts); however, due to the nonlinear characteristics of crystal diodes in the SWR circuit, the most accurate SWR readings are obtained at low power (70 to 100 watt) levels using only the exciter. If the exciter alone will not give full scale relative power readings, the Linear Amplifier may be used, however, limit the drive from the exciter to no more than necessary.

Figure 2-1 shows the Linear Amplifier connected to the Heathkit Model SB-400 Transmitter. Other transmitters or exciters would be connected to the Linear Amplifier in a similar manner.

The Heathkit Model SB-100 Transceiver can be connected to the Linear Amplifier as shown in Figure 2-2.

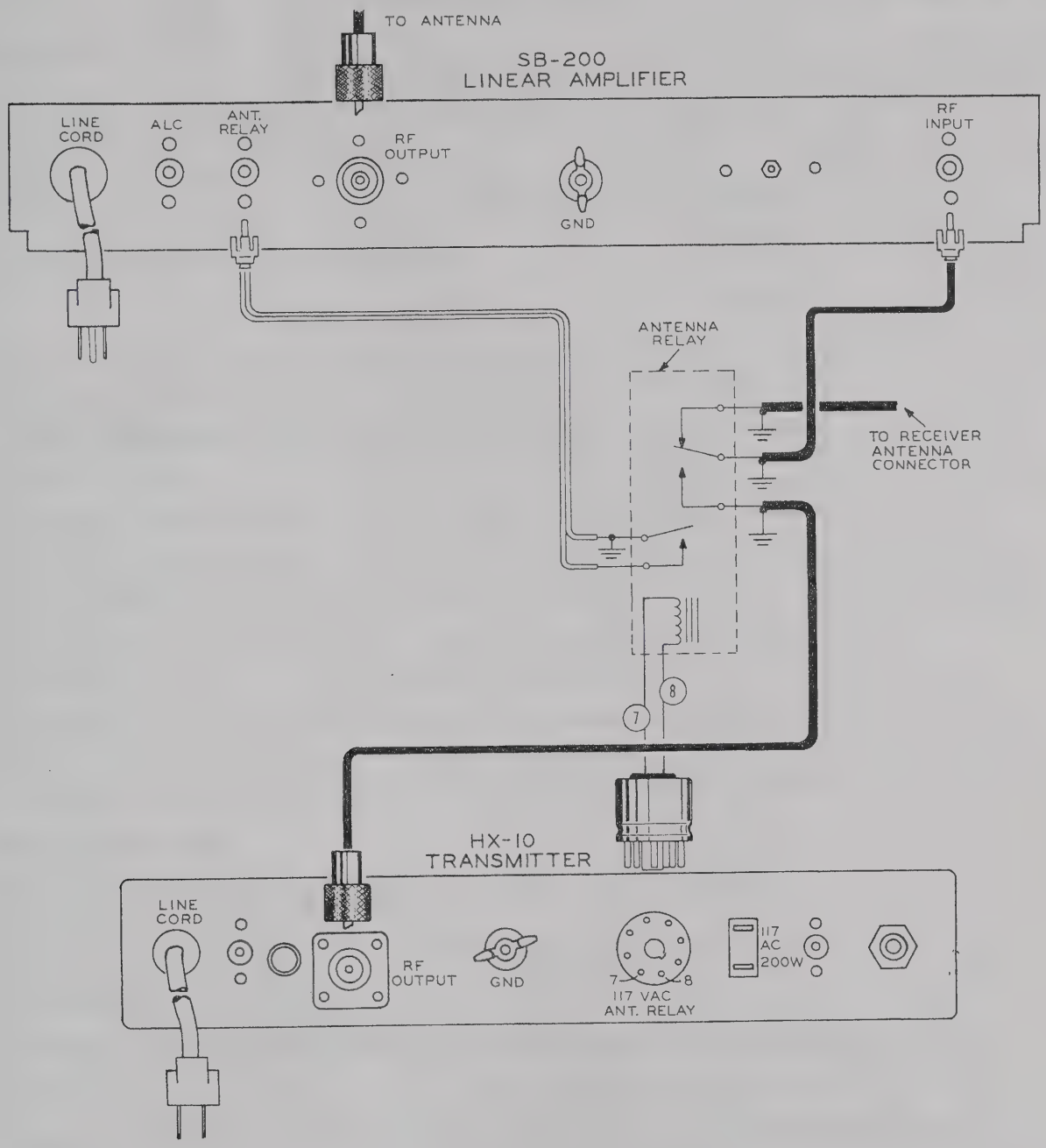

Figure 2-3

Observe in Figure 2-3 that an external antenna relay with extra contacts is necessary to obtain proper antenna switching, when connecting the Linear Amplifier to the Heathkit Model HX-10 Transmitter, and other transmitters not having a built-in antenna relay.

NOTE: The ANT RELAY jack of the Linear Amplifier must be grounded by the exciter to place the Linear Amplifier into operation. (See the Circuit Description.) This grounding is accomplished by the VOX relay or a transmit-receive switch in the exciter.

OPERATION

METER READINGS

Refer to Figure 2-4 and study the meter scale; note how it indicates for the various positions of the Meter switch.

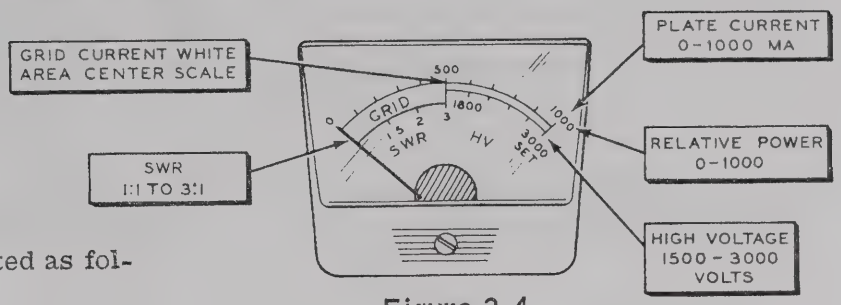

Figure 2-4

The meter scales should be interpreted as follows:

METER SWITCH POSITION	MEASURES	SCALE READING
GRID	Grid current	GRID (white area represents 0-100 ma)
PLATE	Plate current	0-1000 ma
REL PWR	Relative power output	0-1000
SWR	Standing wave ratio	1:1 to 3:1
HV	High voltage	1500-3000

OPERATING PROCEDURE

Make sure the Linear Amplifier is connected to your exciter properly.

( ) Set all switches and controls as follows:

SWITCH OR CONTROL	SWITCH OR CONTROL POSITION	COMMENTS
OFF-ON	OFF	Linear amplifier line cord connected to proper power source.
LOAD	4	Note desired position for antenna used and preset next time.
BAND	80 meters	Or desired band.
TUNE	80 meter segment	Or desired band segment.
METER	REL PWR	
REL PWR SENS	FULLY CLOCKWISE	Adjust to keep meter pointer on scale.

( ) Adjust the exciter for full CW output at the desired frequency. NOTE: With the Linear Amplifier turned OFF, the exciter output is fed through the Linear Amplifier to the RF OUTPUT jack. Also, the REL PWR and SWR functions of the Meter may be used to aid in tuning the exciter.

( ) Reduce the drive level of the exciter to a minimum.

( ) Place the Meter switch of the Linear Amplifier in the PLATE position and push the OFF-ON switch to ON. With no driver output from the exciter, the Linear Amplifier meter should show idling plate current of approximately 90 ma.

( ) Advance the drive level of the exciter for a 200 ma plate current indication on the meter of the Linear Amplifier.

( ) Quickly switch the Linear Amplifier Meter switch to REL PWR. If necessary, reduce the REL PWR SENS control setting to keep the meter pointer within the scale.

( ) Adjust the TUNE and LOAD controls for a maximum REL PWR meter indication.

( ) Increase the drive level from the exciter to full output.

( ) Again, adjust the TUNE and LOAD controls for a maximum REL PWR meter indication.

( ) Check the GRID and PLATE meter readings. If the grid reading is greater than midscale, reduce the drive level of the exciter to bring grid current within the GRID range of the meter. If the plate current reading is higher than 500 ma, reduce loading by turning the LOAD control counterclockwise.

This procedure of tuning the Linear Amplifier should take only a few seconds, after you go through it a few times. Note the LOAD control position so it can be preset next time a particular band is used.

The Linear Amplifier is now loaded for operation at maximum input power. If an oscilloscope is being used for monitoring, a display similar to that shown in Figure 2-5 should be obtained.

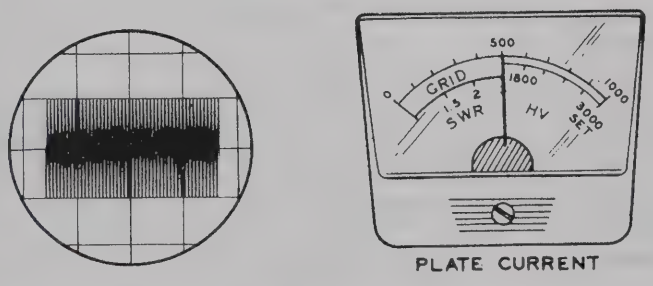

Oscilloscope pattern and plate meter reading resulting from carrier or "single tone" modulation. The meter indicates maximum or CW power input.

Figure 2-5

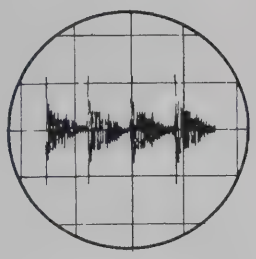

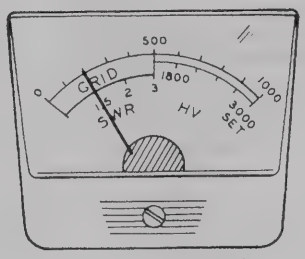

Oscilloscope pattern and plate meter reading resulting from voice modulation. Notice the peaks on the oscilloscope pattern. They are sharp, indicating a clean signal, and they will attain a height slightly greater than the "single tone" pattern of Figure 2-5, indicating maximum power input. NOTE: Plate current peak reading is approximately 1/2 or less of maximum "single tone" reading due to meter inertia and voice characteristics.

Figure 2-6

Turn the exciter to standby to remove drive from the Linear Amplifier.

The Linear Amplifier is now ready for SSB or CW transmission. An example of a proper oscilloscope pattern is shown in Figure 2-6. Note that there are sharp distinct peaks. The number of patterns or "christmas trees" will depend on the individual voice and the scope sweep speed. Set the scope for about a 30 cps sweep.

Note that the meter reading on voice peaks will not be high; however, the height of the oscilloscope pattern is slightly greater than that shown in Figure 2-5. This increase in peak power is due to dynamic characteristics of the power supply and allows the Linear Amplifier to develop approximately 20% greater peak envelope power for a given level of CW input. The meter will indicate only one-half or less of the single tone level, depending on the individual's voice, before "flat topping" occurs.

Figure 2-7 shows the same voice pattern but with extreme "flat topping." The oscilloscope shows that no more useful power is being developed. The meter reads higher, but only distortion is developed.

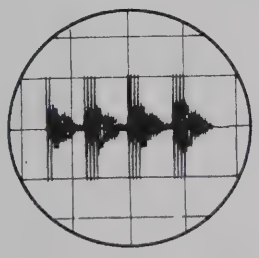

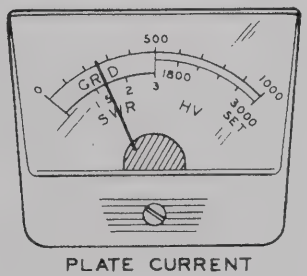

Oscilloscope pattern and plate meter reading resulting from over modulation. The meter reads higher, but the scope indicates peak flattening. Operation in this manner causes distortion and severe interference to adjacent frequencies.

Figure 2-7

IN CASE OF DIFFICULTY

1. Recheck the wiring. Trace each lead in colored pencil on the Pictorial as it is checked. It is frequently helpful to have a friend check your work. Someone who is not familiar with the unit may notice something consistently overlooked by the constructor.

2. It is interesting to note that about 90% of the kits that are returned for repair, do not function properly due to poor connections and soldering. Therefore, many troubles can be eliminated by reheating all connections to make sure that they are soldered as described in the Proper Soldering Techniques section of this manual.

3. Make sure that the tubes light up properly.

4. Check the tubes with a tube tester or by substitution of tubes of the same types and known to be good.

5. Check the values of the parts. Be sure that the proper part has been wired into the circuit, as shown in the Pictorial Diagrams and as called out in the wiring instructions.

6. Check for bits of solder, wire ends or other foreign matter which may be lodged in the wiring.

7. If, after careful checks, the trouble is still not located and a voltmeter is available, check voltage readings against those shown on the Schematic Diagram. NOTE: All voltage readings were taken with an 11 megohm input vacuum tube voltmeter. Voltages may vary as much as 10%.

8. A review of the Circuit Description will prove helpful in indicating where to look for trouble.

NOTE: In an extreme case where you are unable to resolve a difficulty, refer to the Service and Warranty sections of the "Kit Builders Guide", and to the "Factory Repair Service" information on Page 51 of this Manual.

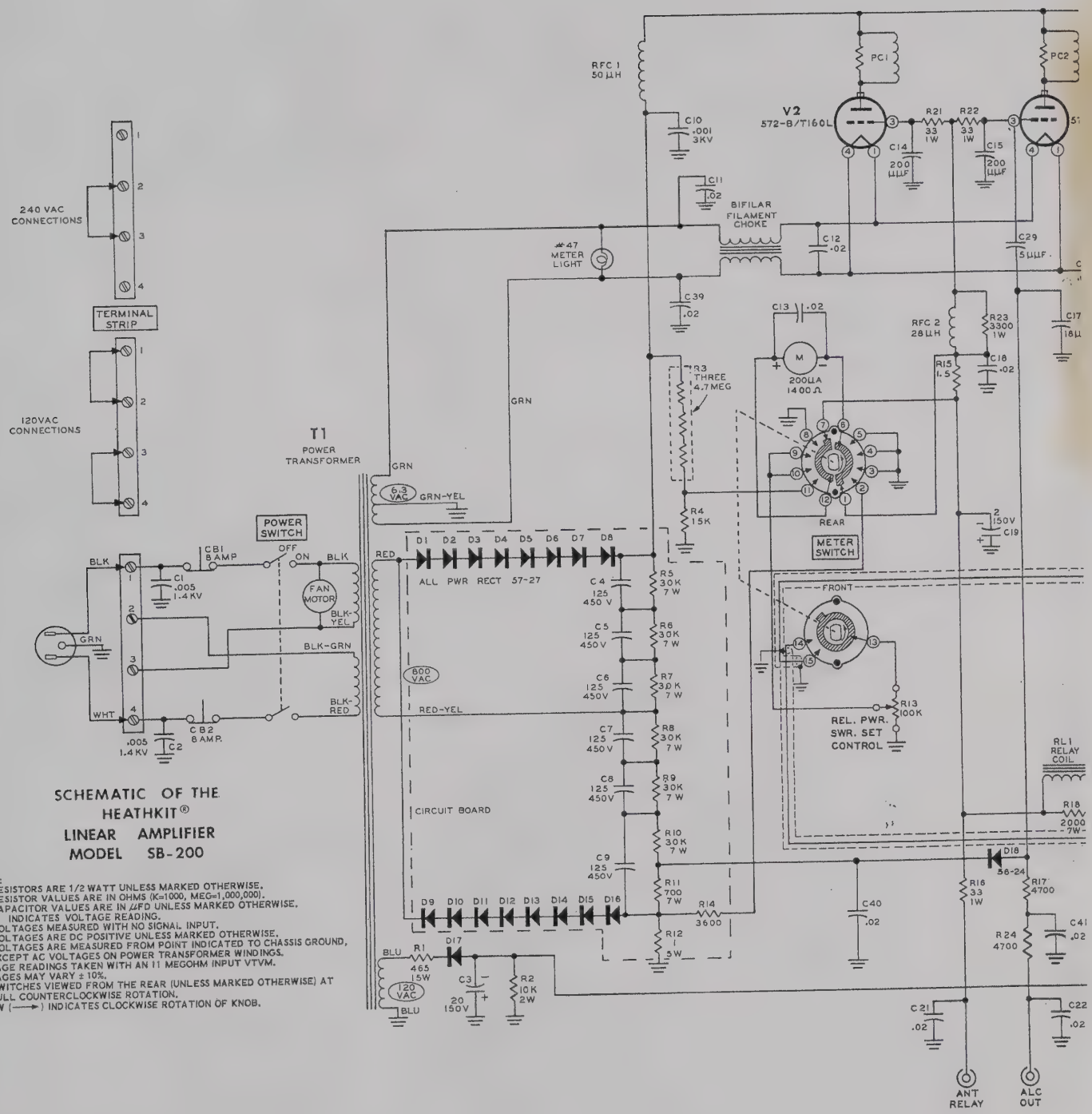

SCHEMATIC OF THE HEATHKIT® LINEAR AMPLIFIER MODEL SB-200

NOTES:
ALL RESISTORS ARE 1/2 WATT UNLESS MARKED OTHERWISE.
ALL RESISTOR VALUES ARE IN OHMS (K=1000, MEG=1,000,000).
ALL CAPACITOR VALUES ARE IN µFD UNLESS MARKED OTHERWISE.
(⬭) INDICATES VOLTAGE READING.
ALL VOLTAGES MEASURED WITH NO SIGNAL INPUT.
ALL VOLTAGES ARE DC POSITIVE UNLESS MARKED OTHERWISE.
ALL VOLTAGES ARE MEASURED FROM POINT INDICATED TO CHASSIS GROUND, EXCEPT AC VOLTAGES ON POWER TRANSFORMER WINDINGS.
VOLTAGE READINGS TAKEN WITH AN 11 MEGOHM INPUT VTVM.
VOLTAGES MAY VARY ± 10%.
ALL SWITCHES VIEWED FROM THE REAR (UNLESS MARKED OTHERWISE) AT FULL COUNTERCLOCKWISE ROTATION.
ARROW (⟶) INDICATES CLOCKWISE ROTATION OF KNOB.

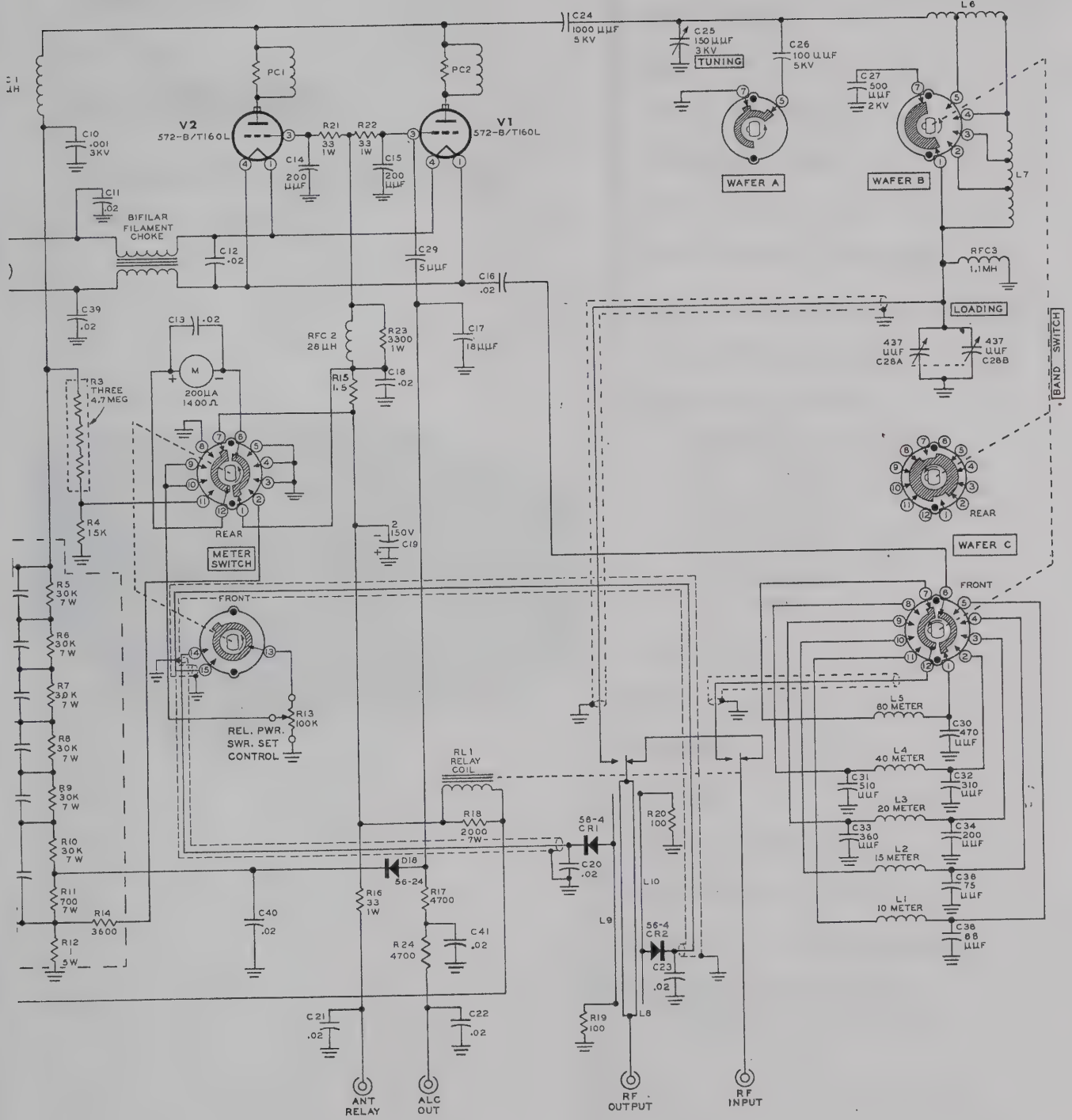
C24
1000 µµF
5 KV
C25
150 µµF
3 KV
TUNING
C26
100 µµF
5KV
L6
C27
500
µµF
2KV
WAFER A
WAFER B
L7
PC1
PC2
V2
572-B/T160L
V1
572-B/T160L
R21
33
1W
R22
33
1W
C10
.001
3KV
C14
200
µµF
C15
200
µµF
C11
.02
BIFILAR
FILAMENT
CHOKE
C12
.02
C29
5 µµF
C16
.02
RFC3
1.1MH
LOADING
437
µµF
C28A
437
µµF
C28B
BAND SWITCH
C39
.02
C13
.02
M
200µA
1400Ω
RFC 2
28 µH
R23
3300
1W
C17
18 µµF
R15
1.5
C18
.02
R3
THREE
4.7MEG
REAR
R4
1.5K
2
150V
C19
METER
SWITCH
WAFER C
FRONT
R5
30K
7W
R6
30K
7W
R7
30K
7W
R8
30K
7W
R9
30K
7W
R10
30K
7W
R11
700
7W
R14
3600
R12
1
5W
R13
100K
REL. PWR.
SWR. SET
CONTROL
RL1
RELAY
COIL
R18
2000
7W
D18
56-24
58-4
CR1
C20
.02
R20
100
L10
L9
58-4
CR2
C23
.02
R19
100
L8
R16
33
1W
R17
4700
R24
4700
C41
.02
C40
.02
C21
.02
C22
.02
L5
80 METER
C30
470
µµF
L4
40 METER
C31
510
µµF
C32
310
µµF
L3
20 METER
C33
360
µµF
C34
200
µµF
L2
15 METER
C38
75
µµF
L1
10 METER
C36
68
µµF
ANT
RELAY
ALC
OUT
RF
OUTPUT
RF
INPUT

Assembly
and
Operation
of the

HEATHKIT

LINEAR AMPLIFIER

MODEL SB-200

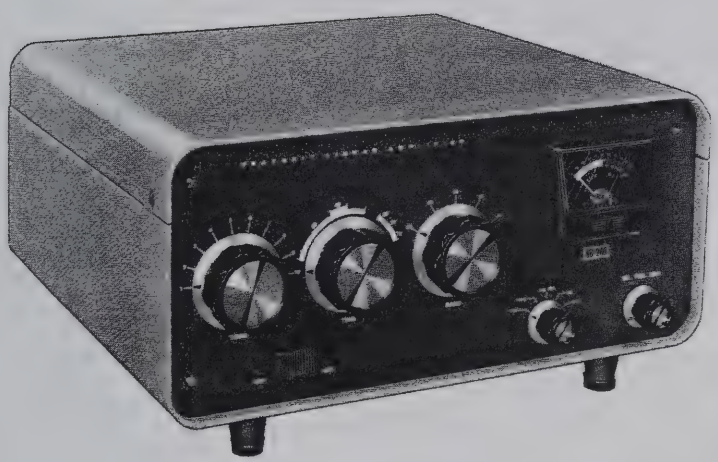

TABLE OF CONTENTS

Specifications. 4

Introduction. 5

Circuit Description. 5

Construction Notes. 7

Parts List. 8

Proper Soldering Techniques. 10

Circuit Board Wiring And Soldering 12

Step-By-Step Procedure 13

Step-By-Step Assembly

- Circuit Board Assembly. 14
- Parts Mounting Chassis. 15
- Parts Mounting - RF Shield. 19
- Wiring RF Shield. 22
- Wiring-Chassis Bottom. 25
- Wiring-SWR Bridge. 30
- Wiring-Chassis Top. 32
- Final Wiring. 36

Initial Test. 42

Final Assembly. 42

Installation. 43

Operation. 47

In Case Of Difficulty. 50

Factory Repair Service 51

Schematic. . . . (fold-out from page). 51

Replacement Parts Price List
(fold-out from page). 52

HEATH COMPANY
BENTON HARBOR, MICHIGAN 49022

SPECIFICATIONS

Band Coverage	80, 40, 20, 15, and 10 meters.
Maximum Power Input	SSB: 1200 watts P.E.P. CW: 1000 watts.
Driving Power Required	100 watts.
Duty Cycle	SSB: continuous voice modulation. CW: 50% (key down time not to exceed 5 minutes).
Third Order Distortion	-30 db or better at 1000 watts P.E.P.
Output Impedance	50 to 75 Ω unbalanced; variable pi-output circuit. SWR not to exceed 2:1.
Input Impedance	52 Ω unbalanced; broad-band pretuned input circuit requires no tuning.
Meter Functions	0-100 ma grid current (white area). 0-1000 ma plate current. 0-1000 relative power. 1:1 to 3:1 SWR. 1500-3000 volts high voltage.
Front Panel Controls	LOAD: 1 to 10. TUNE: 80, 40, 20, 15, and 10 meters. BAND: 80, 40, 20, 15, and 10 meters. RELative Power SENSitivity. Meter Switch: GRID, PLATE, REL PWR, SWR, and HV. Power Switch: OFF, ON.
Tube Complement	Two 572-B (or two T-160-L) in parallel.
Power Requirements	120 volts AC at 16 amperes (maximum). 240 volts AC at 8 amperes (maximum).
Cabinet Size	14-7/8" wide x 6-5/8" high x 13-3/8" deep.
Net Weight	35 lbs.

The Heath Company reserves the right to discontinue instruments and to change specifications at any time without incurring any obligation to incorporate new features in instruments previously sold.

PRICE $2.00

CONDENSED

HEATHKIT®
ASSEMBLY MANUAL

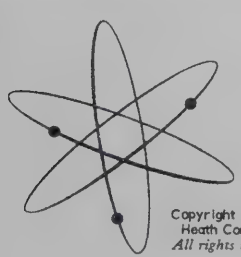

Copyright © 1964
Heath Company
All rights reserved

LINEAR AMPLIFIER

MODEL SB-200

595-682-04

Assembly
and
Operation
of the

HEATHKIT

LINEAR AMPLIFIER

MODEL SB-200

TABLE OF CONTENTS

Specifications 4

Introduction 5

Circuit Description 5

Construction Notes 7

Parts List 8

Proper Soldering Techniques 10

Circuit Board Wiring And Soldering 12

Step-By-Step Procedure 13

Step-By-Step Assembly

- Circuit Board Assembly 14
- Parts Mounting Chassis 15
- Parts Mounting - RF Shield 19
- Wiring RF Shield 22
- Wiring-Chassis Bottom 25
- Wiring-SWR Bridge 30
- Wiring-Chassis Top 32
- Final Wiring 36

Initial Test 42

Final Assembly 42

Installation 43

Operation 47

In Case Of Difficulty 50

Factory Repair Service 51

Schematic . . . . (fold-out from page) 51

Replacement Parts Price List
(fold-out from page) 52

HEATH COMPANY
BENTON HARBOR, MICHIGAN 49022

SPECIFICATIONS

Band Coverage	80, 40, 20, 15, and 10 meters.
Maximum Power Input	SSB: 1200 watts P.E.P. CW: 1000 watts.
Driving Power Required	100 watts.
Duty Cycle	SSB: continuous voice modulation. CW: 50% (key down time not to exceed 5 minutes).
Third Order Distortion	-30 db or better at 1000 watts P.E.P.
Output Impedance	50 to 75 Ω unbalanced; variable pi-output circuit. SWR not to exceed 2:1.
Input Impedance	52 Ω unbalanced; broad-band pretuned input circuit requires no tuning.
Meter Functions	0-100 ma grid current (white area). 0-1000 ma plate current. 0-1000 relative power. 1:1 to 3:1 SWR. 1500-3000 volts high voltage.
Front Panel Controls	LOAD: 1 to 10. TUNE: 80, 40, 20, 15, and 10 meters. BAND: 80, 40, 20, 15, and 10 meters. RELative Power SENSitivity. Meter Switch: GRID, PLATE, REL PWR, SWR, and HV. Power Switch: OFF, ON.
Tube Complement	Two 572-B (or two T-160-L) in parallel.
Power Requirements	120 volts AC at 16 amperes (maximum). 240 volts AC at 8 amperes (maximum).
Cabinet Size	14-7/8" wide x 6-5/8" high x 13-3/8" deep.
Net Weight	35 lbs.

The Heath Company reserves the right to discontinue instruments and to change specifications at any time without incurring any obligation to incorporate new features in instruments previously sold.

INTRODUCTION

With the increasing popularity of single sideband, suppressed-carrier phone transmission as a mode of amateur radio communication, more Amateurs are finding it possible to run higher transmitter power inputs than they could previously afford with conventional AM equipment. Since high-level modulating equipment is not necessary in single-sideband service, the cost of converting to high power is considerably reduced.

In keeping with this trend toward higher power in single-sideband service, the Heathkit Model SB-200 Linear Amplifier was designed to provide high power capability and complete versatility. Nearly any of the popular SSB and CW exciters available today can be used as a driver for this Amplifier.

The amplifier RF compartment is completely enclosed by perforated aluminum shielding. This type of construction increases stability and greatly decreases radiation that could cause TVI. The Amplifier is forced-air cooled to prolong tube life.

CIRCUIT DESCRIPTION

POWER SUPPLY

The power supply uses a power transformer which has dual-primary and triple-secondary windings. The primary winding may be connected for either 120 or 240 volt AC operation. The blower fan is connected across one-half of the primary winding. The transformer is protected against overload by reset type circuit breakers CB1 and CB2.

One secondary winding of the power transformer supplies 6.3 volts AC for the tube filaments and the pilot lamp in the meter. Another secondary winding is used with silicon diodes D1 through D16 and electrolytic capacitors C4 through C9 in a full-wave voltage-doubler circuit to provide plate voltage for the tubes. Resistors R5 through R10 insure that the voltage across each of the electrolytic capacitors is equalized; these resistors also serve as a bleeder network.

Resistor R11 at the bottom of the bleeder network provides an ALC threshold voltage of approximately 10 volts DC. Resistor R12 provides a means of measuring plate current independently, without also measuring bleeder current.

The third secondary winding, with resistors R1 and R2, capacitor C3, and silicon diode D17 forms a half-wave rectifier circuit. This circuit provides antenna relay control voltage and cut-off bias voltage for the grids of the amplifier tubes.

INPUT CIRCUIT

Tubes V1 and V2 are connected in parallel in a cathode-driven (grounded grid), class B configuration. Driving power for each band is coupled through a broad-band network, consisting of a coil and associated capacitors, and through capacitor C16 to the cathodes of tubes V1 and V2. Coils L1 through L5 with their associated capacitors are used to make up these impedance-matching networks, which reduce distortion and increase efficiency.

The correct input network, as well as the correct output circuit coil tap, for each band is selected with the Band switch. (The coils in the input networks are factory aligned and require no further adjustment.)

To keep the capacitance of the transformer filament winding from shunting the RF driving power to ground, the filament winding is isolated from the cathode circuit by a bifilar-wound filament choke. Also, this choke provides a cathode current path to ground.

OUTPUT CIRCUIT

High voltage is applied to the plates of tubes V1 and V2 through RF choke RFC1 and parasitic chokes PC1 and PC2. Tuning capacitor C25 is connected on the input side of tapped final coils L6 and L7. C26 is switched in parallel with the Tuning capacitor on the 80 meter band.

Loading capacitors C28A and C28B are on the output side of final coils L6 and L7. Capacitor C27 is switched in parallel with the Loading capacitor on the 80 meter band. Output power is applied through antenna change-over relay RL1 and through the SWR (standing wave ratio) bridge circuit to the RF Output connector. The SWR bridge consists of L8, L9, and L10, capacitors C20 and C23, resistors R19 and R20, and crystal diodes CR1 and CR2.

ANTENNA CHANGE-OVER AND CUTOFF BIAS CIRCUITS

Antenna change-over relay RL1 is controlled by a VOX (voice operated transmitter) relay in the exciter used with the Linear Amplifier. The relay in the exciter is connected to the Antenna Relay jack of the Linear Amplifier. When transmitting, the VOX relay grounds the Antenna Relay; when receiving, the Antenna Relay is ungrounded.

While receiving, cut-off bias voltage from the power supply bias circuit is applied through the coil of relay RL1, and through resistor R15 and choke RFC2, to the grids of tubes V1 and V2. The Antenna Relay jack is ungrounded and no current will flow through the coil of relay RL1, which allows the relay to remain open. Thus it connects the RF Output jack (antenna) to the RF Input jack of the Linear Amplifier.

When transmitting, the Antenna Relay jack is grounded by the VOX relay of the exciter. This allows current to flow through the coil of relay RL1 and actuate the relay. When actuated, relay RL1 connects the RF Output jack (antenna) to the output circuit of the Linear Amplifier. Grounding the Antenna Relay jack also grounds the grids of tubes V1 and V2 through RFC2, and resistors R15 and R16. This removes all but -2 volts from the grids of the tubes. This -2 volts is operating bias, which limits resting plate current to approximately 90 milliamperes.

When operating with the Linear Amplifier turned OFF, there is no bias voltage to operate relay RL1 and the RF Input jack remains connected to the antenna, through RF Output jack. This permits low power operation directly from the exciter into the antenna without changing any cables. Because silicon rectifiers and instant-heating-filament tubes are used in the Linear Amplifier, you can go to high power operation as soon as the Linear Amplifier is turned ON.

METERING CIRCUITS

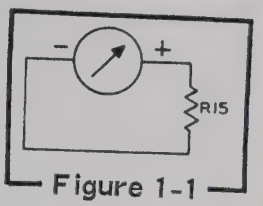

Figure 1-1

GRID - Figure 1-1

In the Grid position of the meter switch, the meter is connected to measure the voltage across grid resistor R15. The voltage across this resistor is directly proportional to the grid current which flows through it; therefore, the meter will indicate grid current. Since grid current in tubes V1 and V2 should not exceed 100 ma, only half (white area) of the 0-200 ma meter scale is used for this measurement.

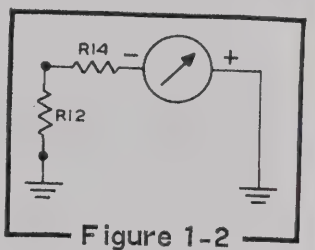

Figure 1-2

PLATE - Figure 1-2

Plate current is read on the top scale of the meter. This scale is divided into 20 ma divisions from 0 to 1000 ma. Plate current readings are obtained by measuring the voltage across resistor R12, through series resistor R14.

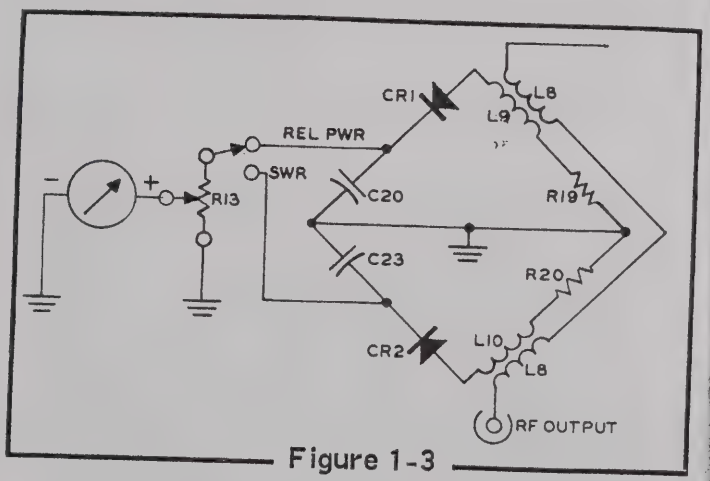

Figure 1-3

REL PWR And SWR - Figure 1-3

Relative Power and Standing Wave Ratio are measured with a bridge circuit, consisting of coils L8, L9, and L10, diodes CR1 and CR2, resistors R19 and R20, and capacitors C20 and

C23. Relative Power Sensitivity control R13 sets the sensitivity of the meter. The REL PWR position is used when adjusting the TUNE and LOAD controls for maximum output of the Linear Amplifier; this meter function is also used to establish a "set" meter level for making SWR measurements.

Because coil L8 of the bridge circuit is connected in series between the RF Input and RF Output jacks when the Linear Amplifier is turned OFF, the meter can be used to measure REL PWR and SWR when operating the exciter alone. This method of checking SWR is recommended for accurately determining antenna performance.

In the bridge circuit, RF current is inductively and capacitively coupled from L8, to L9 and L10. The RF currents in L9 and L10 are rectified by diodes CR1 and CR2, and then filtered by capacitors C20 and C23.

For REL PWR measurements, the rectified RF voltage from L9 is applied to the meter. For SWR (reflected power) measurements, the rectified RF voltage from L10 is applied to the meter.

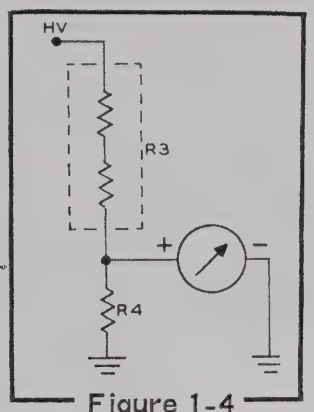

Figure 1-4

HV - Figure 1-4

High Voltage is measured with a voltage divider network consisting of resistors R3 and R4. The voltage across resistor R4 is applied to the meter. High voltage is read on the lower right-hand meter scale (1500 to 3000).

CONSTRUCTION NOTES

This manual is supplied to assist you in every way to complete your kit with the least possible chance for error. The arrangement shown is the result of extensive experimentation and trial. If followed carefully, the result will be highly stable and dependable performance. We suggest that you retain the manual in your files for future reference, both in the use of the equipment and for its maintenance.

UNPACK THE KIT CAREFULLY AND CHECK EACH PART AGAINST THE PARTS LIST. In so doing, you will become acquainted with the parts. Refer to the information on the inside covers of the manual to help you identify the components. If some shortage or parts damage is found in checking the Parts List, please read the Replacements section and supply the information called for therein.

Resistors generally have a tolerance rating of 10% unless otherwise stated in the Parts List. Tolerances on capacitors are generally even greater. Limits of +100% and -20% are common for electrolytic capacitors.

We suggest that you do the following before work is started:

1. Lay out all parts so that they are readily available.
2. Provide yourself with good quality tools. Basic tool requirements consist of a screwdriver with a 1/4" blade; a small screwdriver with a 1/8" blade; phillips screwdriver; long-nose pliers; wire cutters, preferably separate diagonal cutters; a penknife or a tool for stripping insulation from wires; a soldering iron (or gun) and rosin core solder. A set of nut drivers and a nut starter, while not necessary, will aid extensively in construction of the kit.

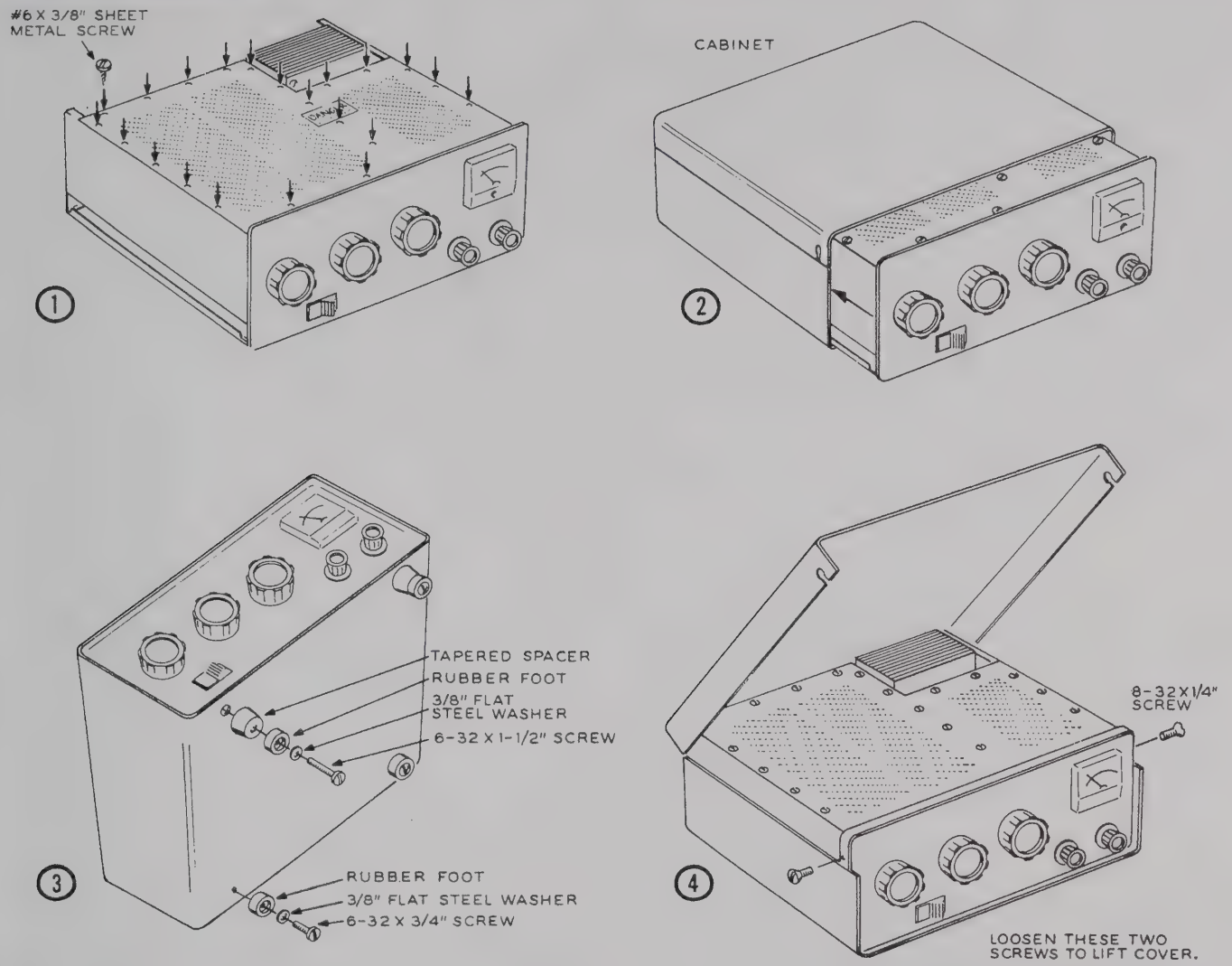

PICTORIAL 16

INSTALLATION

LOCATION

Although the Linear Amplifier has a built-in fan for cooling purposes, avoid excessively warm locations such as those near radiators and heating vents. The unit should be placed in a location that provides adequate space around it, permitting free air circulation through the cabinet openings.

POWER SOURCE

The Linear Amplifier is designed to operate from either a 120 volt or 240 volt AC, 60 cps power source, depending on the jumper installation on terminal strip S. The AC power outlet used should be properly fused and fed with not smaller than #14 wire.

EXCITER

The Linear Amplifier can be driven by most commercial or home-built exciters with a power output of approximately 100 watts. The Heathkit SB-400 or SB-401 Transmitter or the SB-100 or SB-101 Transceiver is ideal for use with this Linear Amplifier.

Exciters in the 40 to 60 watt output class will not drive the Linear Amplifier to a full kilowatt, however, the Linear Amplifier will operate quite efficiently at lower power levels.

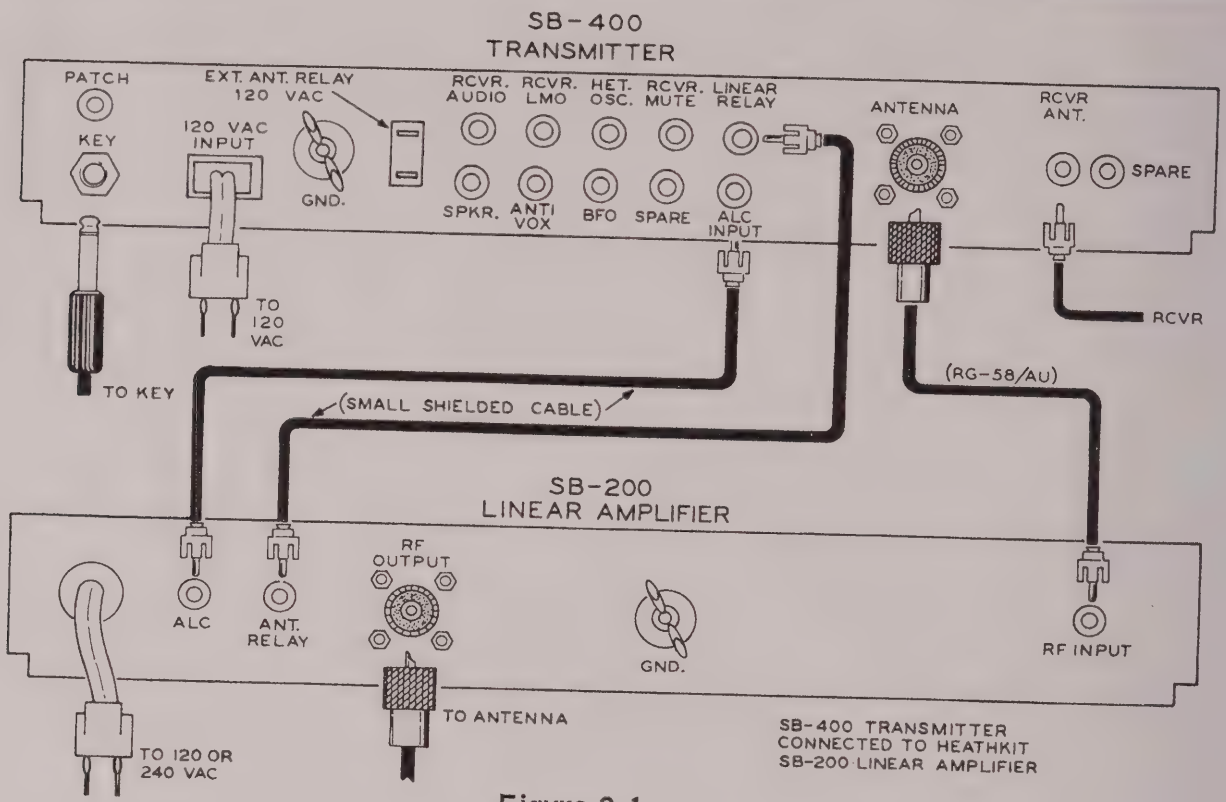

Figure 2-1

ANTENNA

The pi-network output is designed to work into a 50 to 75 Ω transmission line. Most commercial and home-built antennas are designed to be fed with 50 or 72 Ω coax. RG-8/U or RG-11/U coaxial cable is recommended for the transmission line, and every effort should be made to get the SWR of the antenna down to less than 2 to 1.

SWR MEASUREMENTS

( ) Connect the amplifier to the exciter and the antenna. Do not turn the Linear Amplifier ON, thus permitting the exciter to feed through the Linear Amplifier to the antenna.

( ) Place the Linear Amplifier Meter switch in the REL PWR position.

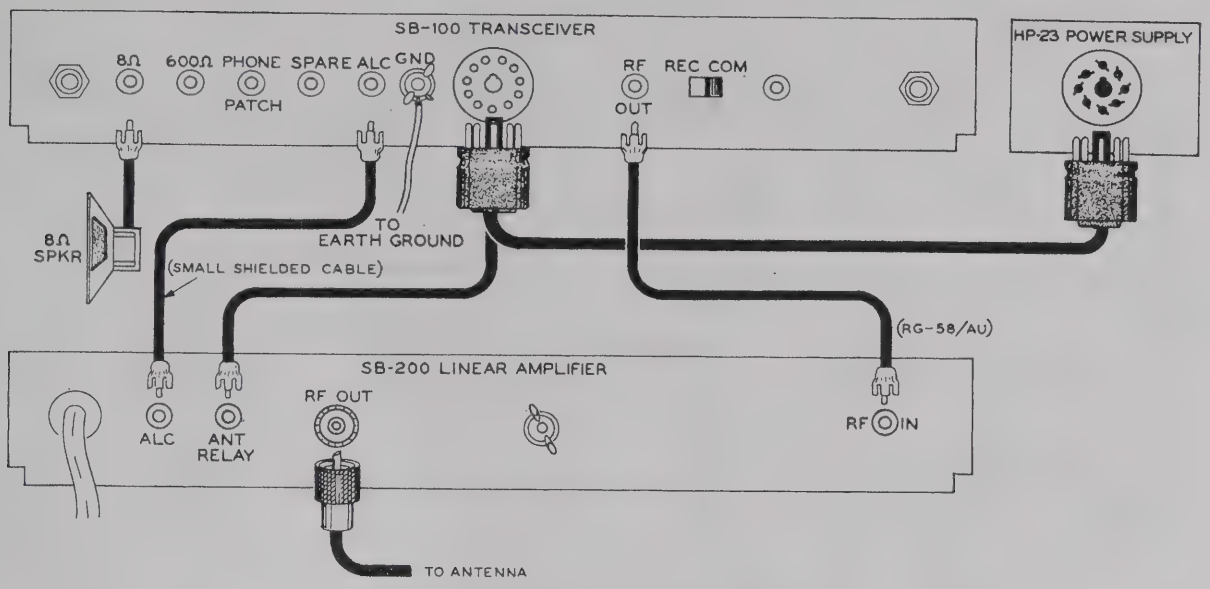

Figure 2-2

( ) Load the exciter to full output. The meter of the Linear Amplifier may be used for this purpose, as it will function in both the REL PWR and SWR positions without the Linear Amplifier being turned ON.

( ) Adjust the REL PWR SENS control of the Linear Amplifier for a SET (full-scale) indication on the meter.

( ) Turn the meter switch to SWR and read the standing wave ratio directly from the meter (1 to 3 scale).

NOTE: SWR checks can also be made with the Linear Amplifier operating at full power (1000 watts); however, due to the nonlinear characteristics of crystal diodes in the SWR circuit, the most accurate SWR readings are obtained at low power (70 to 100 watt) levels using only the exciter. If the exciter alone will not give full scale relative power readings, the Linear Amplifier may be used, however, limit the drive from the exciter to no more than necessary.

Figure 2-1 shows the Linear Amplifier connected to the Heathkit Model SB-400 Transmitter. Other transmitters or exciters would be connected to the Linear Amplifier in a similar manner.

The Heathkit Model SB-100 Transceiver can be connected to the Linear Amplifier as shown in Figure 2-2.

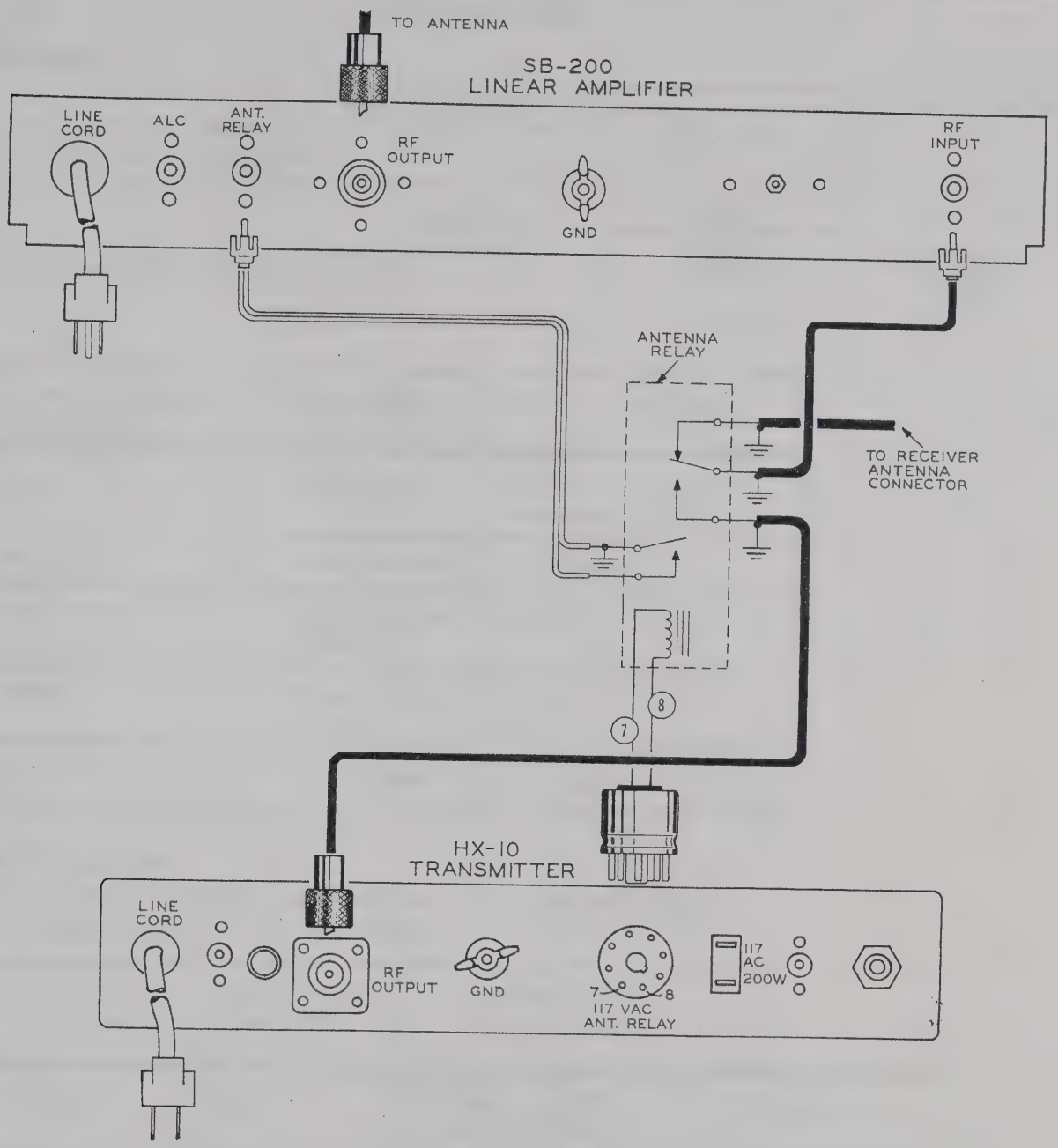

Figure 2-3

Observe in Figure 2-3 that an external antenna relay with extra contacts is necessary to obtain proper antenna switching, when connecting the Linear Amplifier to the Heathkit Model HX-10 Transmitter, and other transmitters not having a built-in antenna relay.

NOTE: The ANT RELAY jack of the Linear Amplifier must be grounded by the exciter to place the Linear Amplifier into operation. (See the Circuit Description.) This grounding is accomplished by the VOX relay or a transmit-receive switch in the exciter.

OPERATION

METER READINGS

Refer to Figure 2-4 and study the meter scale; note how it indicates for the various positions of the Meter switch.

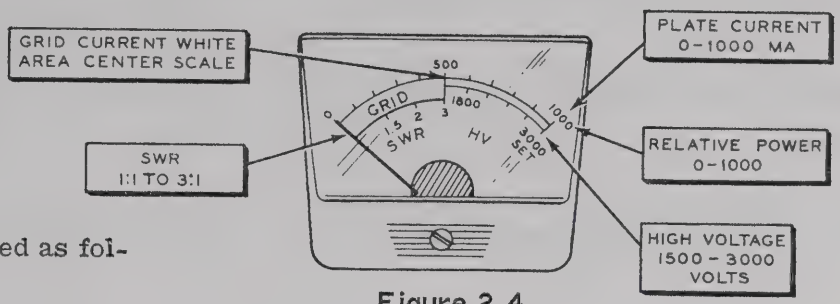

Figure 2-4

The meter scales should be interpreted as follows:

METER SWITCH POSITION	MEASURES	SCALE READING
GRID	Grid current	GRID (white area represents 0-100 ma)
PLATE	Plate current	0-1000 ma
REL PWR	Relative power output	0-1000
SWR	Standing wave ratio	1:1 to 3:1
HV	High voltage	1500-3000

OPERATING PROCEDURE

Make sure the Linear Amplifier is connected to your exciter properly.

( ) Set all switches and controls as follows:

SWITCH OR CONTROL	SWITCH OR CONTROL POSITION	COMMENTS
OFF-ON	OFF	Linear amplifier line cord connected to proper power source.
LOAD	4	Note desired position for antenna used and preset next time.
BAND	80 meters	Or desired band.
TUNE	80 meter segment	Or desired band segment.
METER	REL PWR	
REL PWR SENS	FULLY CLOCKWISE	Adjust to keep meter pointer on scale.

( ) Adjust the exciter for full CW output at the desired frequency. NOTE: With the Linear Amplifier turned OFF, the exciter output is fed through the Linear Amplifier to the RF OUTPUT jack. Also, the REL PWR and SWR functions of the Meter may be used to aid in tuning the exciter.

( ) Reduce the drive level of the exciter to a minimum.

( ) Place the Meter switch of the Linear Amplifier in the PLATE position and push the OFF-ON switch to ON. With no driver output from the exciter, the Linear Amplifier meter should show idling plate current of approximately 90 ma.

( ) Advance the drive level of the exciter for a 200 ma plate current indication on the meter of the Linear Amplifier.

( ) Quickly switch the Linear Amplifier Meter switch to REL PWR. If necessary, reduce the REL PWR SENS control setting to keep the meter pointer within the scale.

( ) Adjust the TUNE and LOAD controls for a maximum REL PWR meter indication.

( ) Increase the drive level from the exciter to full output.

( ) Again, adjust the TUNE and LOAD controls for a maximum REL PWR meter indication.

( ) Check the GRID and PLATE meter readings. If the grid reading is greater than midscale, reduce the drive level of the exciter to bring grid current within the GRID range of the meter. If the plate current reading is higher than 500 ma, reduce loading by turning the LOAD control counterclockwise.

This procedure of tuning the Linear Amplifier should take only a few seconds, after you go through it a few times. Note the LOAD control position so it can be preset next time a particular band is used.

The Linear Amplifier is now loaded for operation at maximum input power. If an oscilloscope is being used for monitoring, a display similar to that shown in Figure 2-5 should be obtained.

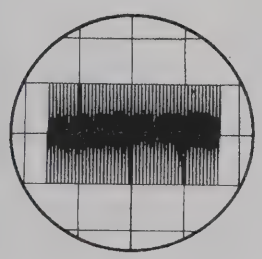

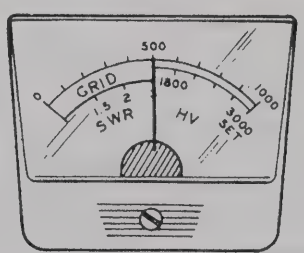

Oscilloscope pattern and plate meter reading resulting from carrier or "single tone" modulation. The meter indicates maximum or CW power input.

Figure 2-5

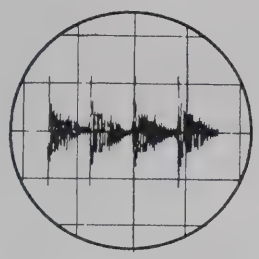

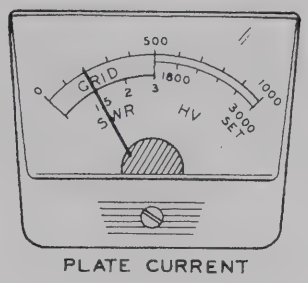

Oscilloscope pattern and plate meter reading resulting from voice modulation. Notice the peaks on the oscilloscope pattern. They are sharp, indicating a clean signal, and they will attain a height slightly greater than the "single tone" pattern of Figure 2-5, indicating maximum power input. NOTE: Plate current peak reading is approximately 1/2 or less of maximum "single tone" reading due to meter inertia and voice characteristics.

Figure 2-6

Turn the exciter to standby to remove drive from the Linear Amplifier.

The Linear Amplifier is now ready for SSB or CW transmission. An example of a proper oscilloscope pattern is shown in Figure 2-6. Note that there are sharp distinct peaks. The number of patterns or "christmas trees" will depend on the individual voice and the scope sweep speed. Set the scope for about a 30 cps sweep.

Note that the meter reading on voice peaks will not be high; however, the height of the oscilloscope pattern is slightly greater than that shown in Figure 2-5. This increase in peak power is due to dynamic characteristics of the power supply and allows the Linear Amplifier to develop approximately 20% greater peak envelope power for a given level of CW input. The meter will indicate only one-half or less of the single tone level, depending on the individual's voice, before "flat topping" occurs.

Figure 2-7 shows the same voice pattern but with extreme "flat topping." The oscilloscope shows that no more useful power is being developed. The meter reads higher, but only distortion is developed.

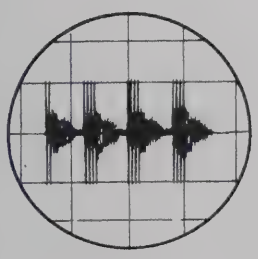

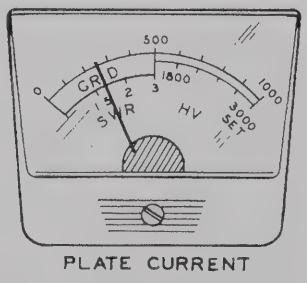

Oscilloscope pattern and plate meter reading resulting from over modulation. The meter reads higher, but the scope indicates peak flattening. Operation in this manner causes distortion and severe interference to adjacent frequencies.

Figure 2-7

IN CASE OF DIFFICULTY

1. Recheck the wiring. Trace each lead in colored pencil on the Pictorial as it is checked. It is frequently helpful to have a friend check your work. Someone who is not familiar with the unit may notice something consistently overlooked by the constructor.

2. It is interesting to note that about 90% of the kits that are returned for repair, do not function properly due to poor connections and soldering. Therefore, many troubles can be eliminated by reheating all connections to make sure that they are soldered as described in the Proper Soldering Techniques section of this manual.

3. Make sure that the tubes light up properly.

4. Check the tubes with a tube tester or by substitution of tubes of the same types and known to be good.

5. Check the values of the parts. Be sure that the proper part has been wired into the circuit, as shown in the Pictorial Diagrams and as called out in the wiring instructions.

6. Check for bits of solder, wire ends or other foreign matter which may be lodged in the wiring.

7. If, after careful checks, the trouble is still not located and a voltmeter is available, check voltage readings against those shown on the Schematic Diagram. NOTE: All voltage readings were taken with an 11 megohm input vacuum tube voltmeter. Voltages may vary as much as 10%.

8. A review of the Circuit Description will prove helpful in indicating where to look for trouble.

NOTE: In an extreme case where you are unable to resolve a difficulty, refer to the Service and Warranty sections of the "Kit Builders Guide", and to the "Factory Repair Service" information on Page 51 of this Manual.

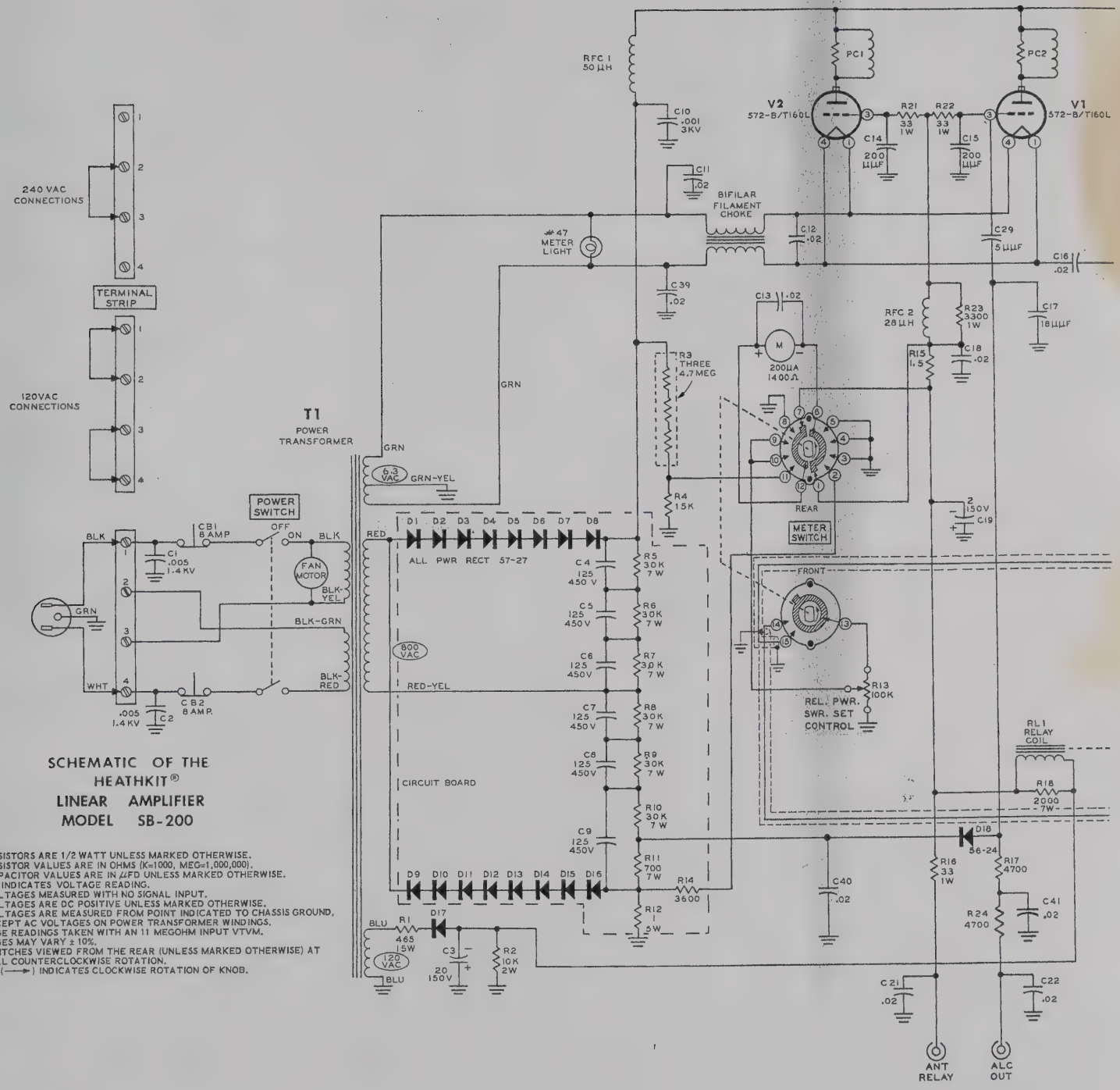

SCHEMATIC OF THE HEATHKIT® LINEAR AMPLIFIER MODEL SB-200

NOTES:
ALL RESISTORS ARE 1/2 WATT UNLESS MARKED OTHERWISE.
ALL RESISTOR VALUES ARE IN OHMS (K=1000, MEG=1,000,000).
ALL CAPACITOR VALUES ARE IN µFD UNLESS MARKED OTHERWISE.
⬭ INDICATES VOLTAGE READING.
ALL VOLTAGES MEASURED WITH NO SIGNAL INPUT.
ALL VOLTAGES ARE DC POSITIVE UNLESS MARKED OTHERWISE.
ALL VOLTAGES ARE MEASURED FROM POINT INDICATED TO CHASSIS GROUND, EXCEPT AC VOLTAGES ON POWER TRANSFORMER WINDINGS.
VOLTAGE READINGS TAKEN WITH AN 11 MEGOHM INPUT VTVM.
VOLTAGES MAY VARY ± 10%.
ALL SWITCHES VIEWED FROM THE REAR (UNLESS MARKED OTHERWISE) AT FULL COUNTERCLOCKWISE ROTATION.
ARROW (⟶) INDICATES CLOCKWISE ROTATION OF KNOB.

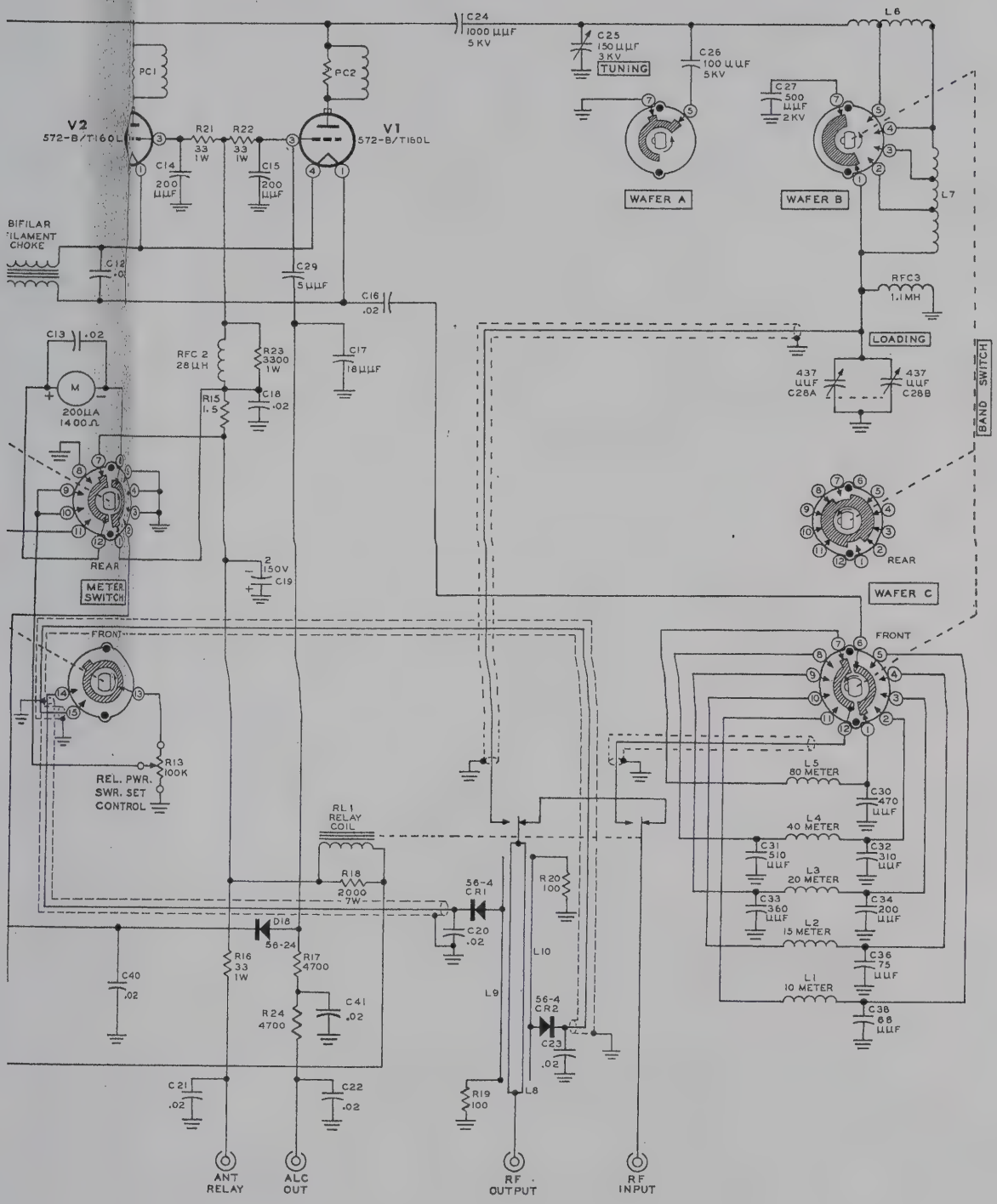
C24
1000 µµF
5 KV
C25
150 µµF
3 KV
TUNING
C26
100 µµF
5 KV
L6
PC1
PC2
V2
572-B/T160L
V1
572-B/T160L
R21
33
1W
R22
33
1W
C14
200
µµF
C15
200
µµF
C27
500
µµF
2 KV
WAFER A
WAFER B
L7
BIFILAR
FILAMENT
CHOKE
C12
.01
C29
5 µµF
C16
.02
RFC3
1.1MH
LOADING
C13
.02
M
200µA
1400Ω
RFC 2
28µH
R23
3300
1W
C17
18µµF
R15
1.5
C18
.02
437
µµF
C28A
437
µµF
C28B
BAND SWITCH
REAR
METER
SWITCH
2
150V
C19
REAR
WAFER C
FRONT
FRONT
REL. PWR.
SWR. SET
CONTROL
R13
100K
RL1
RELAY
COIL
L5
80 METER
C30
470
µµF
L4
40 METER
C31
510
µµF
C32
310
µµF
L3
20 METER
C33
360
µµF
C34
200
µµF
L2
15 METER
C36
75
µµF
L1
10 METER
C38
68
µµF
R18
2000
7W
56-4
CR1
R20
100
D18
56-24
C20
.02
L10
L9
56-4
CR2
C23
.02
R16
33
1W
R17
4700
R24
4700
C41
.02
C40
.02
L8
R19
100
C21
.02
C22
.02
ANT
RELAY
ALC
OUT
RF
OUTPUT
RF
INPUT

MODEL

SB-200 Linear Amplifier

HEATHKIT®

ASSEMBLY MANUAL

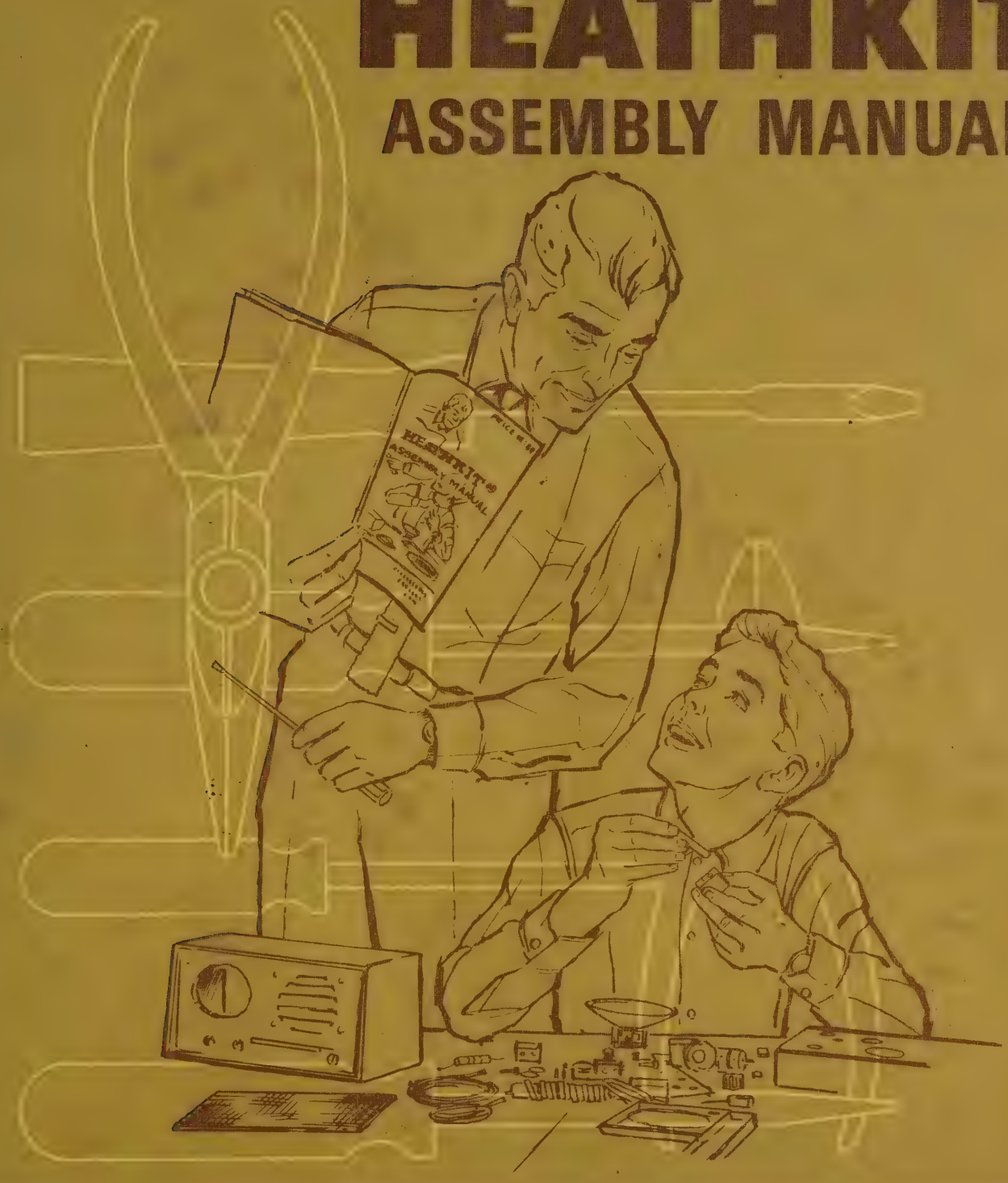

HEATHKIT®

Copyright ©1964
Heath Company
All rights reserved

595-682-05

PRICE $2.00

Dear Customer:

The Heathkit electronic product you have purchased is one of the best performing electronic products in the world.

Here's how we aim to keep it that way:

Your Heathkit Warranty

During your first 90 days of ownership, any parts which we find are defective, either in materials or workmanship, will be replaced or repaired free of charge. And we'll pay shipping charges to get those parts to you — anywhere in the world.

If we determine a defective part has caused your Heathkit electronic product to need other repair, through no fault of yours, we will service it free — at the factory, at any retail Heathkit Electronic Center, or through any of our authorized overseas distributors.

This protection is exclusively yours as the original purchaser. Naturally, it doesn't cover damage by use of acid-core solder, incorrect assembly, misuse, fire, flood or acts of God. But, it does insure the performance of your Heathkit electronic product anywhere in the world — for most any other reason.

After-Warranty Service

What happens after warranty? We won't let you down. If your Heathkit electronic product needs repairs or you need a part, just write or call the factory, your nearest retail Heathkit Electronic Center, or any Heath authorized overseas distributor. We maintain an inventory of replacement parts for each Heathkit model at most locations — even for many models that no longer appear in our current product line-up. Repair service and technical consultation are available through all locations.

We hope you'll never need our repair or replacement services, but it's nice to know you're protected anyway — and that cheerful help is nearby.

Sincerely,

HEATH COMPANY
Benton Harbor, Michigan 49022

Assembly
and
Operation
of the

HEATHKIT

LINEAR AMPLIFIER

MODEL SB-200

TABLE OF CONTENTS

Specifications 4

Introduction 5

Circuit Description 5

Construction Notes 7

Parts List 8

Proper Soldering Techniques 10

Circuit Board Wiring And Soldering 12

Step-By-Step Procedure 13

Step-By-Step Assembly

- Circuit Board Assembly 14
- Parts Mounting Chassis 15
- Parts Mounting - RF Shield 19
- Wiring RF Shield 22
- Wiring-Chassis Bottom 25
- Wiring-SWR Bridge 30
- Wiring-Chassis Top 32
- Final Wiring 36

Initial Test 42

Final Assembly 42

Installation 43

Operation 47

In Case Of Difficulty 50

Factory Repair Service 51

Schematic . . . . (fold-out from page) 51

Replacement Parts Price List
(fold-out from page) 52

HEATH COMPANY
BENTON HARBOR, MICHIGAN 49022

SPECIFICATIONS

Band Coverage	80, 40, 20, 15, and 10 meters.
Maximum Power Input	SSB: 1200 watts P.E.P. CW: 1000 watts.
Driving Power Required	100 watts.
Duty Cycle	SSB: continuous voice modulation. CW: 50% (key down time not to exceed 5 minutes).
Third Order Distortion	-30 db or better at 1000 watts P.E.P.
Output Impedance	50 to 75 Ω unbalanced; variable pi-output circuit. SWR not to exceed 2:1.
Input Impedance	52 Ω unbalanced; broad-band pretuned input circuit requires no tuning.
Meter Functions	0-100 ma grid current (white area). 0-1000 ma plate current. 0-1000 relative power. 1:1 to 3:1 SWR. 1500-3000 volts high voltage.
Front Panel Controls	LOAD: 1 to 10. TUNE: 80, 40, 20, 15, and 10 meters. BAND: 80, 40, 20, 15, and 10 meters. RELative Power SENSitivity. Meter Switch: GRID, PLATE, REL PWR, SWR, and HV. Power Switch: OFF, ON.
Tube Complement	Two 572-B (or two T-160-L) in parallel.
Power Requirements	120 volts AC at 16 amperes (maximum). 240 volts AC at 8 amperes (maximum).
Cabinet Size	14-7/8" wide x 6-5/8" high x 13-3/8" deep.
Net Weight	35 lbs.

The Heath Company reserves the right to discontinue instruments and to change specifications at any time without incurring any obligation to incorporate new features in instruments previously sold.

CAUTION

Use extreme care during initial testing and all subsequent operation of this Linear Amplifier. While the SB-200 is designed for maximum safety, never lose respect for the high voltage present in this unit. Protect yourself always against lethal or severe electric shock.

HEATH COMPANY

INTRODUCTION

With the increasing popularity of single sideband, suppressed-carrier phone transmission as a mode of amateur radio communication, more Amateurs are finding it possible to run higher transmitter power inputs than they could previously afford with conventional AM equipment. Since high-level modulating equipment is not necessary in single-sideband service, the cost of converting to high power is considerably reduced.

In keeping with this trend toward higher power in single-sideband service, the Heathkit Model SB-200 Linear Amplifier was designed to provide high power capability and complete versatility. Nearly any of the popular SSB and CW exciters available today can be used as a driver for this Amplifier.

The amplifier RF compartment is completely enclosed by perforated aluminum shielding. This type of construction increases stability and greatly decreases radiation that could cause TVI. The Amplifier is forced-air cooled to prolong tube life.

CIRCUIT DESCRIPTION

POWER SUPPLY

The power supply uses a power transformer which has dual-primary and triple-secondary windings. The primary winding may be connected for either 120 or 240 volt AC operation. The blower fan is connected across one-half of the primary winding. The transformer is protected against overload by reset type circuit breakers CB1 and CB2.

One secondary winding of the power transformer supplies 6.3 volts AC for the tube filaments and the pilot lamp in the meter. Another secondary winding is used with silicon diodes D1 through D16 and electrolytic capacitors C4 through C9 in a full-wave voltage-doubler circuit to provide plate voltage for the tubes. Resistors R5 through R10 insure that the voltage across each of the electrolytic capacitors is equalized; these resistors also serve as a bleeder network.

Resistor R11 at the bottom of the bleeder network provides an ALC threshold voltage of approximately 10 volts DC. Resistor R12 provides a means of measuring plate current independently, without also measuring bleeder current.

The third secondary winding, with resistors R1 and R2, capacitor C3, and silicon diode D17 forms a half-wave rectifier circuit. This circuit provides antenna relay control voltage and cut-off bias voltage for the grids of the amplifier tubes.

INPUT CIRCUIT

Tubes V1 and V2 are connected in parallel in a cathode-driven (grounded grid), class B configuration. Driving power for each band is coupled through a broad-band network, consisting of a coil and associated capacitors, and through capacitor C16 to the cathodes of tubes V1 and V2. Coils L1 through L5 with their associated capacitors are used to make up these impedance-matching networks, which reduce distortion and increase efficiency.

The correct input network, as well as the correct output circuit coil tap, for each band is selected with the Band switch. (The coils in the input networks are factory aligned and require no further adjustment.)

To keep the capacitance of the transformer filament winding from shunting the RF driving power to ground, the filament winding is isolated from the cathode circuit by a bifilar-wound filament choke. Also, this choke provides a cathode current path to ground.

OUTPUT CIRCUIT

High voltage is applied to the plates of tubes V1 and V2 through RF choke RFC1 and parasitic chokes PC1 and PC2. Tuning capacitor C25 is connected on the input side of tapped final coils L6 and L7. C26 is switched in parallel with the Tuning capacitor on the 80 meter band.

Loading capacitors C28A and C28B are on the output side of final coils L6 and L7. Capacitor C27 is switched in parallel with the Loading capacitor on the 80 meter band. Output power is applied through antenna change-over relay RL1 and through the SWR (standing wave ratio) bridge circuit to the RF Output connector. The SWR bridge consists of L8, L9, and L10, capacitors C20 and C23, resistors R19 and R20, and crystal diodes CR1 and CR2.

ANTENNA CHANGE-OVER AND CUTOFF BIAS CIRCUITS

Antenna change-over relay RL1 is controlled by a VOX (voice operated transmitter) relay in the exciter used with the Linear Amplifier. The relay in the exciter is connected to the Antenna Relay jack of the Linear Amplifier. When transmitting, the VOX relay grounds the Antenna Relay; when receiving, the Antenna Relay is ungrounded.

While receiving, cut-off bias voltage from the power supply bias circuit is applied through the coil of relay RL1, and through resistor R15 and choke RFC2, to the grids of tubes V1 and V2. The Antenna Relay jack is ungrounded and no current will flow through the coil of relay RL1, which allows the relay to remain open. Thus it connects the RF Output jack (antenna) to the RF Input jack of the Linear Amplifier.

When transmitting, the Antenna Relay jack is grounded by the VOX relay of the exciter. This allows current to flow through the coil of relay RL1 and actuate the relay. When actuated, relay RL1 connects the RF Output jack (antenna) to the output circuit of the Linear Amplifier. Grounding the Antenna Relay jack also grounds the grids of tubes V1 and V2 through RFC2, and resistors R15 and R16. This removes all but -2 volts from the grids of the tubes. This -2 volts is operating bias, which limits resting plate current to approximately 90 milliamperes.

When operating with the Linear Amplifier turned OFF, there is no bias voltage to operate relay RL1 and the RF Input jack remains connected to the antenna, through RF Output jack. This permits low power operation directly from the exciter into the antenna without changing any cables. Because silicon rectifiers and instant-heating-filament tubes are used in the Linear Amplifier, you can go to high power operation as soon as the Linear Amplifier is turned ON.

METERING CIRCUITS

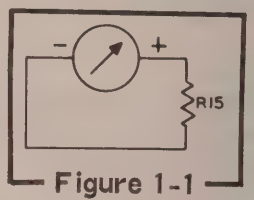

Figure 1-1

GRID - Figure 1-1

In the Grid position of the meter switch, the meter is connected to measure the voltage across grid resistor R15. The voltage across this resistor is directly proportional to the grid current which flows through it; therefore, the meter will indicate grid current. Since grid current in tubes V1 and V2 should not exceed 100 ma, only half (white area) of the 0-200 ma meter scale is used for this measurement.

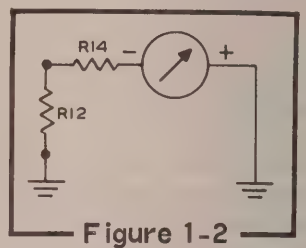

Figure 1-2

PLATE - Figure 1-2

Plate current is read on the top scale of the meter. This scale is divided into 20 ma divisions from 0 to 1000 ma. Plate current readings are obtained by measuring the voltage across resistor R12, through series resistor R14.

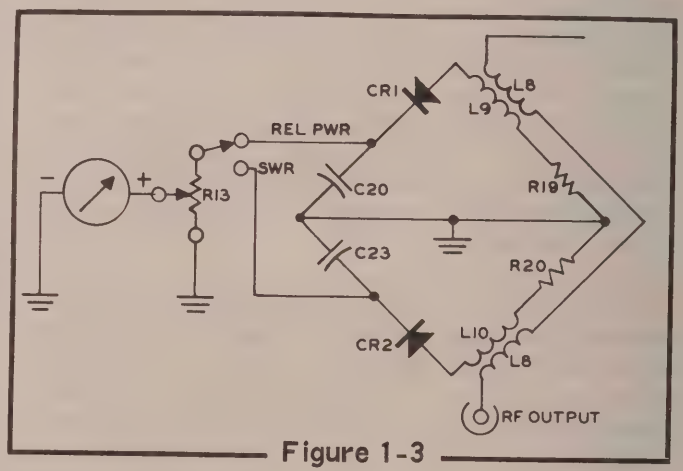

Figure 1-3

REL PWR And SWR - Figure 1-3

Relative Power and Standing Wave Ratio are measured with a bridge circuit, consisting of coils L8, L9, and L10, diodes CR1 and CR2, resistors R19 and R20, and capacitors C20 and

C23. Relative Power Sensitivity control R13 sets the sensitivity of the meter. The REL PWR position is used when adjusting the TUNE and LOAD controls for maximum output of the Linear Amplifier; this meter function is also used to establish a "set" meter level for making SWR measurements.

Because coil L8 of the bridge circuit is connected in series between the RF Input and RF Output jacks when the Linear Amplifier is turned OFF, the meter can be used to measure REL PWR and SWR when operating the exciter alone. This method of checking SWR is recommended for accurately determining antenna performance.

In the bridge circuit, RF current is inductively and capacitively coupled from L8, to L9 and L10. The RF currents in L9 and L10 are rectified by diodes CR1 and CR2, and then filtered by capacitors C20 and C23.

For REL PWR measurements, the rectified RF voltage from L9 is applied to the meter. For SWR (reflected power) measurements, the rectified RF voltage from L10 is applied to the meter.

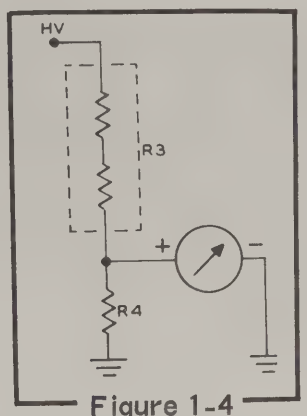

Figure 1-4

HV - Figure 1-4

High Voltage is measured with a voltage divider network consisting of resistors R3 and R4. The voltage across resistor R4 is applied to the meter. High voltage is read on the lower right-hand meter scale (1500 to 3000).

CONSTRUCTION NOTES

This manual is supplied to assist you in every way to complete your kit with the least possible chance for error. The arrangement shown is the result of extensive experimentation and trial. If followed carefully, the result will be highly stable and dependable performance. We suggest that you retain the manual in your files for future reference, both in the use of the equipment and for its maintenance.

UNPACK THE KIT CAREFULLY AND CHECK EACH PART AGAINST THE PARTS LIST. In so doing, you will become acquainted with the parts. Refer to the information on the inside covers of the manual to help you identify the components. If some shortage or parts damage is found in checking the Parts List, please read the Replacements section and supply the information called for therein.

Resistors generally have a tolerance rating of 10% unless otherwise stated in the Parts List. Tolerances on capacitors are generally even greater. Limits of +100% and -20% are common for electrolytic capacitors.

We suggest that you do the following before work is started:

1. Lay out all parts so that they are readily available.
2. Provide yourself with good quality tools. Basic tool requirements consist of a screwdriver with a 1/4" blade; a small screwdriver with a 1/8" blade; phillips screwdriver; long-nose pliers; wire cutters, preferably separate diagonal cutters; a penknife or a tool for stripping insulation from wires; a soldering iron (or gun) and rosin core solder. A set of nut drivers and a nut starter, while not necessary, will aid extensively in construction of the kit.

Most kit builders find it helpful to separate the various parts into convenient categories. Muffin tins or molded egg cartons make convenient trays for small parts. Resistors and capacitors may be placed with their lead ends inserted in the edge of a piece of corrugated cardboard until they are needed. Values can be written on the cardboard next to each component. The illustration shows one method that may be used.

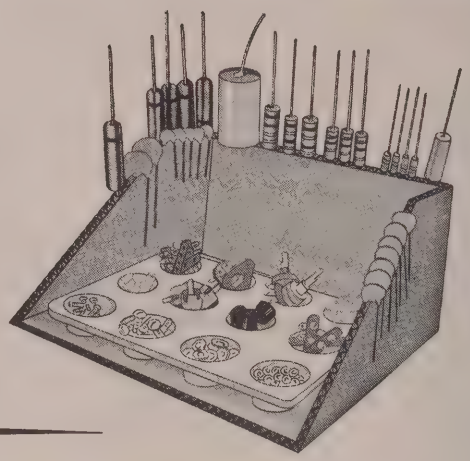

PARTS LIST

The numbers in parenthese in the Parts List are Keyed to the numbers on the Parts Pictorial to aid in parts identification.

To order replacement parts, refer to the "Replacement Parts Price List" and use the Parts Order Form furnished with this kit.

	PART No.	PARTS Per Kit	DESCRIPTION
	RESISTORS		
	1/2 WATT		
(1)	1-140	1	1.5 Ω (brown-green-gold-silver)
	1-3	2	100 Ω (brown-black-brown)
	1-16	2	4700 Ω (yellow-violet-red)
	1-21	1	15 KΩ (brown-green-orange)
	2-121	1	3600 Ω precision
	1 WATT		
(2)	1-14-1	3	33 Ω (orange-orange-black)
	1-3-1	1	3300 Ω (orange-orange-red)
	1-38-1	3	4.7 megohm (yellow-violet-green)
	OTHER RESISTORS		
(3)	1-3-2	1	10 KΩ 2 watt (brown-black-orange)
(4)	3-25-5	1	1 Ω 5 watt
	3-12-7	1	700 Ω 7 watt
	3-14-7	1	2000 Ω 7 watt
	5-2-7	6	30 KΩ 7 watt
(5)	3-2-17	1	465 Ω 15 watt
	CAPACITORS		
(6)	20-40	1	470 μμf silver mica
	20-123	1	500 μμf 2 KV silver mica (.0005)
	20-42	1	510 μμf silver mica

	PART No.	PARTS Per Kit	DESCRIPTION
	CAPACITORS (Cont'd.)		
(7)	20-76	1	68 μμf mica
	20-110	1	75 μμf mica
	20-108	3	200 μμf mica
	20-112	1	310 μμf mica
	20-131	1	360 μμf mica
(8)	21-78	1	5 μμf disc
	21-60	1	18 μμf disc
	21-72	2	.005 μfd 1.4 KV disc
	21-90	1	.001 μfd 3 KV disc
	21-31	12	.02 μfd disc
(9)	21-109	1	100 μμf 5 KV tubular ceramic
	21-165	1	1000 μμf 6 KV tubular ceramic
(10)	25-39	1	2 μfd 150 V electrolytic
	25-19	1	20 μfd 150 V electrolytic
(11)	25-34	6	125 μfd 450 V electrolytic
	26-96	1	150 μμf, 3 KV, variable
	26-97	1	874.8 μμf variable, 2-section
	CONTROLS-SWITCHES		
(12)	10-12	1	100 KΩ control
(13)	61-14	1	DPST rocker switch
	63-351	1	3-wafer rotary switch
	63-352	1	1-wafer rotary switch
(14)	65-15	2	8 ampere circuit breaker
	69-5	1	DPDT 110 V AC relay

PART No.	PARTS Per Kit	DESCRIPTION
COILS-CHOKES-TRANSFORMERS		
(15) 40-98	1	RF driver element
(16) 40-99	2	RF pickup element
(17) 40-591	1	80 meter input coil
40-592	1	40 meter input coil
40-593	1	20 meter input coil
40-727	1	15 meter input coil
40-728	1	10 meter input coil
(18) 40-596	1	10 and 15 meter final coil
(19) 40-597	1	20, 40, and 80 meter final coil
(20) 45-4	1	1.1 mh RF choke
(21) 45-60	1	10 μh RF choke
(22) 45-18	1	28 μh RF choke
(23) 45-61	1	50 μh RF choke
(24) 45-53	2	Parasitic RF choke
54-151	1	Power transformer
DIODES-TUBES		
(25) 56-26	2	1N191 crystal diode (brown-white-brown)
(26) 56-24	1	IN458 silicon diode (yellow-green-gray)
(27) 57-27	17	Silicon diode
411-198	2	572-B tube or T160-L
INSULATORS-GROMMETS-TERMINAL STRIPS-SOCKETS		
(28) 71-5	1	Ceramic standoff insulator with 6-32 stud
73-4	2	5/16" grommet
73-1	2	3/8" grommet
73-3	1	1/2" grommet
(29) 75-29	1	Line cord strain relief
(30) 431-50	1	1-lug terminal strip
(31) 431-16	1	2-lug terminal strip
431-10	2	3-lug terminal strip
431-11	1	5-lug terminal strip
431-45	2	6-lug terminal strip
431-13	1	Screw type terminal strip
(32) 434-9	2	4-lug tube socket
(33) 434-42	3	Phono socket
(34) 436-5	1	Coaxial socket
(35) 438-9	1	Coaxial plug
(36) 438-12	1	Coaxial plug insert
(37) 438-4	3	Phono plug

PART No.	PARTS Per Kit	DESCRIPTION
WIRE-CABLE-SLEEVING		
89-22	1	Line cord
134-107	1	Cable assembly
340-1	1	Bare wire
344-52	1	Red solid hookup wire
344-54	1	Yellow solid hookup wire
344-55	1	Green solid hookup wire
344-58	1	Gray solid hookup wire
344-13	1	Large blue hookup wire
343-2	1	Large shielded cable (RG-58 A/U)
343-3	1	Small shielded cable
346-4	1	Small sleeving
346-3	1	Large sleeving
HARDWARE		
SCREWS		
(38) 250-213	6	4-40 x 5/16"
(39) 250-28	1	6-32 x 1/4" setscrew
(40) 250-8	21	#6 x 3/8" sheet metal screw
(41) 250-138	2	6-32 x 3/16" screw
(42) 250-56	37	6-32 x 1/4"
(43) 250-89	21	6-32 x 3/8"
(44) 250-218	4	6-32 x 3/8" phillips head
(45) 250-32	8	6-32 x 3/8" flat head
(46) 250-26	1	6-32 x 5/8"
(47) 250-29	4	6-32 x 3/4"
(48) 250-40	2	6-32 x 1-1/2"
(49) 250-260	2	8-32 x 1/4"
(50) 250-43	8	8-32 x 1/4" setscrew
(51) 250-141	4	10-24 x 1/2"
(52) 250-126	2	10-32 x 1/2"
(53) 250-67	1	10-24 x 1-1/8" phillips head
(54) 251-1	2	6-32 spade bolt
NUTS		
(55) 252-15	6	4-40
(56) 252-3	63	6-32
(57) 252-30	5	10-24
(58) 252-31	1	10-24 wingnut
(59) 252-7	3	Control

PART No.	PARTS Per Kit	DESCRIPTION
WASHERS		
(60) 253-27	2	5/16" flat steel
(61) 253-8	4	7/16" flat brass
(62) 253-60	8	3/8" flat steel
(63) 253-1	2	3/8" fiber flat
(64) 253-3	4	1/2" fiber flat
(65) 253-7	2	1/2" fiber shoulder
(66) 253-10	3	Flat control
(67) 253-19	4	3/4" flat steel
(68) 254-9	6	#4 lockwasher
(69) 254-1	67	#6 lockwasher
(70) 254-3	5	#10 lockwasher
(71) 254-4	3	Control lockwasher
MISCELLANEOUS		
(72) 255-2	1	3/16" spacer
(73) 255-42	4	3/4" phenolic spacer
(74) 255-12	3	Plastic spacer
(75) 255-59	2	Tapered spacer
(76) 259-1	18	#6 solder lug
(77) 259-5	1	#10 solder lug
(78) 259-10	1	Control solder lug
(79) 260-34	2	Anode clip
(80) 435-1	2	Socket ring

PART No.	PARTS Per Kit	DESCRIPTION
METAL PARTS		
(81) 40-100	1	Coaxial cavity
90-341	1	Cabinet
200-403-1	1	Chassis
203-384-1	1	Front panel
(82) 205-492	1	Capacitor mounting bracket
(83) 204-560	2	Angle bracket
(84) 204-611	1	Circuit breaker mounting bracket
206-254	1	RF shield
(85) 206-255	1	Power supply shield
205-438	1	Top plate
MISCELLANEOUS		
85-88-2	1	Circuit board
(86) 261-9	4	Rubber foot
266-21	1	Fan blade
390-147	2	DANGER label
391-31	1	Nameplate
407-103	1	Meter
420-3	1	Motor
(87) 432-27	1	3-prong AC adapter
462-191	2	Small knob
462-210	3	Large knob
	1	Manual (See front cover for part number.)
		Solder

PROPER SOLDERING TECHNIQUES

Only a small percentage of customers find it necessary to return equipment for factory service. By far the largest portion of malfunctions in this equipment are due to poor or improper soldering.

If terminals are bright and clean and free of wax, frayed insulation and other foreign substances, no difficulty will be experienced in soldering. Correctly soldered connections are essential if the performance engineered into a kit is to be fully realized. If you are a beginner with no experience in soldering, a half hour's practice with some odd lengths of wire may be a worthwhile investment.

For most wiring, a 25 to 100 watt iron or its equivalent in a soldering gun is very satisfactory. A lower wattage iron than this may not heat the connection enough to flow the solder smoothly. Keep the iron tip clean by wiping it from time to time with a cloth.

CHASSIS WIRING AND SOLDERING

1. Unless otherwise indicated, all wire used is the type with colored insulation (hookup wire). In preparing a length of hookup wire, 1/4" of insulation should be removed from each end unless directed otherwise in the assembly step.

2. To avoid breaking internal connections when stripping insulation from the leads of transformers or similar components, care should be taken not to pull directly on the lead. Instead, hold the lead with pliers while it is being stripped.

3. Leads on resistors, capacitors, and similar components are generally much longer than need be to make the required connections. In these cases, the leads should be cut to proper length before the part is installed. In general, the leads should be just long enough to reach their terminating points.

4. Wherever there is a possibility of bare leads shorting to other parts or to the chassis, the leads should be covered with insulating sleeving. Where the use of sleeving is specifically intended, the phrase "use sleeving" is included in the associated assembly step. In any case where there is the possibility of an unintentional short circuit, sleeving should be used. Extra sleeving is provided for this purpose.

5. Crimp or bend the lead (or leads) around the terminal to form a good joint without relying on solder for physical strength. If the lead is too large to allow bending or if the step states that it is not to be crimped, position it so that a good solder connection can still be made.

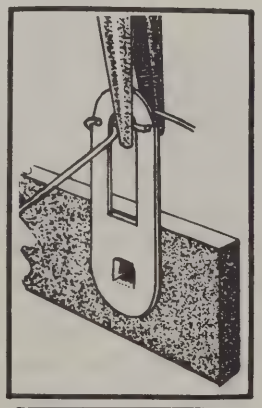

6. Position the work, if possible, so that gravity will help to keep the solder where you want it.

7. Place a flat side of the soldering iron tip against the joint to be soldered until it is heated sufficiently to melt the solder.

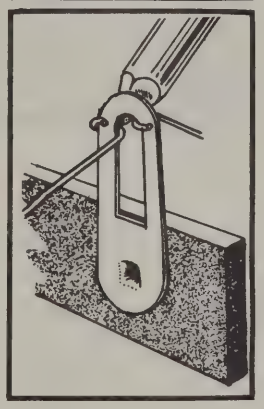

8. Then place the solder against the connection and it will immediately flow over the joint; use only enough solder to thoroughly wet the junction. It is usually not necessary to fill the entire terminal with solder.

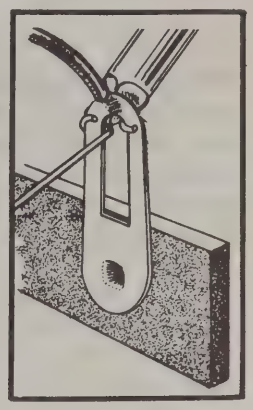

9. Remove the solder and then the iron from the completed joint. Use care not to move the leads until the solder is solidified.

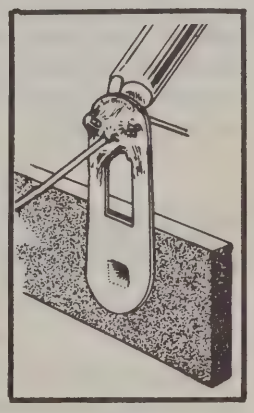

A poor or cold solder joint will usually look crystalline and have a grainy texture, or the solder will stand up in a blob and will not have adhered to the joint. Such joints should be reheated until the solder flows smoothly. In some cases, it may be necessary to add a little more solder to achieve a smooth, bright appearance.

ROSIN CORE SOLDER HAS BEEN SUPPLIED WITH THIS KIT. THIS TYPE OF SOLDER MUST BE USED FOR ALL SOLDERING IN THIS KIT. ALL GUARANTEES ARE VOIDED AND WE WILL NOT REPAIR OR SERVICE EQUIPMENT IN WHICH ACID CORE SOLDER OR PASTE FLUXES HAVE BEEN USED. IF ADDITIONAL SOLDER IS NEEDED, BE SURE TO PURCHASE ROSIN CORE (60:40 or 50:50 TIN-LEAD CONTENT) RADIO TYPE SOLDER.

CIRCUIT BOARD WIRING AND SOLDERING

Before attempting any work on the circuit board, read the following instructions carefully and study the Figures. It is only necessary to observe the following basic precautions to insure proper operation of the unit the first time it is turned on.

Proper mounting of components on the board is essential for good performance. A good general rule to follow is that all components on the board should be mounted tightly to the board, unless instructions state otherwise. All leads should be kept as short as possible to minimize the effects of stray capacity in the wiring. Proper and improper methods of mounting are illustrated in the accompanying Figures.

NOTE: Exercise care not to damage resistors or capacitors when bending the leads as shown.

Tubular capacitors and resistors will fit properly if the leads are bent as shown. Components with lugs normally require no preparation unless the lugs appear to be bent, in which case they can be straightened with pliers.

Parts should be inserted as instructed, and the leads bent outward, as illustrated, to lock them in place. After the part is in position, cut the leads off about 1/4" from the board. When a group of parts have been installed on a circuit board, solder each lead to the foil pattern and clip off the excess wire.

The actual technique of soldering leads to a circuit board is quite simple. Position the tip of the soldering iron so that it firmly contacts both the circuit board foil and the wire or lug to be soldered, as shown. The iron should be held so that solder is not likely to flow to adjacent foil conductors or connections. The solder should immediately be placed between the iron and the joint to be soldered. Remove the length of solder as soon as its end begins to melt and flow onto the lead and foil. Hold the tip of the iron in place only until the solder begins to flow outward over the foil; then remove the iron quickly.

Avoid overheating the connection. A soldering pencil or small iron (approximately 25 watts) is ideal for use in circuit board work. If only a high wattage iron or soldering gun is available, precautions must be taken to avoid circuit board damage due to overheating and excess solder.

The use of excessive amount of solder will increase the possibility of bridging between foil conductors or plugging holes which are to be left open for wires which may be added later on. If solder is accidentally bridged across insulating areas between conductors, it can be cleaned off by heating the connection carefully and quickly wiping or brushing the solder away with a soft cloth or clean brush. Holes which become plugged can be cleared by heating the area immediately over the hole while gently pushing the lead of a resistor through the hole from the opposite side, and withdrawing the lead before the solder rehardens. Do not force the lead through; too much pressure before the solder has time to soften may separate the foil from the board.

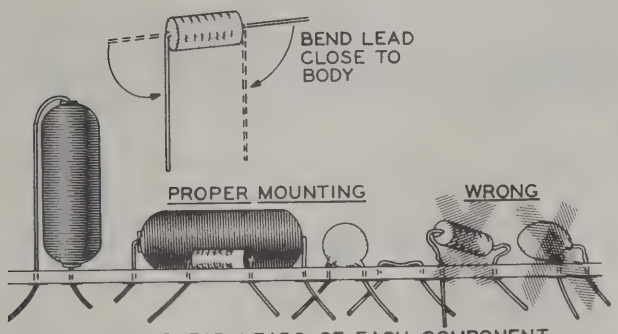
BEND LEAD CLOSE TO BODY
PROPER MOUNTING
WRONG
SPREAD LEADS OF EACH COMPONENT TO KEEP THEM FROM FALLING OUT WHEN THE BOARD IS TURNED OVER

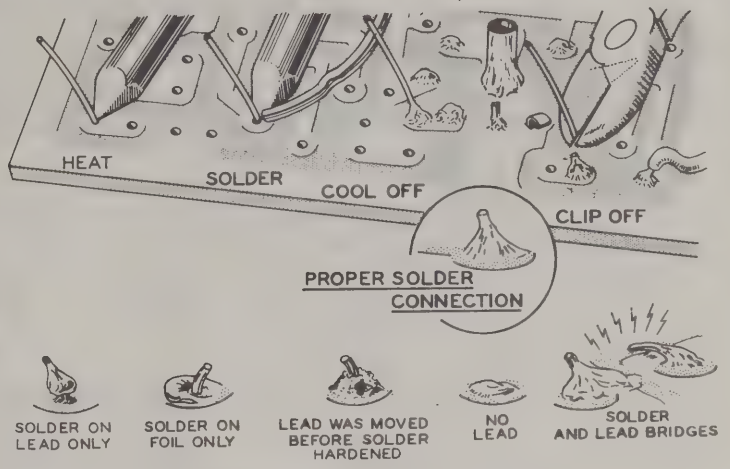

STEP-BY-STEP PROCEDURE

The following instructions are presented in a logical step-by-step sequence to enable you to complete your kit with the least possible confusion. Be sure to read each step all the way through before beginning the specified operation. Also read several steps ahead of the actual step being performed. This will familiarize you with the relationship of the subsequent operations. When the step is completed, check it off in the space provided. This is particularly important as it may prevent errors or omissions, especially if your work is interrupted. Some kit builders have also found it helpful to mark each wire and part in colored pencil on the Pictorial as it is added.

ILLUSTRATIONS

The fold-out diagrams in this manual may be removed and attached to the wall above your working area; but because they are an integral part of the instructions, they should be returned to the manual after the kit is completed. In general, the illustrations in this manual correspond to the actual configuration of the kit; however, in some instances the illustrations may be slightly distorted to facilitate clearly showing all of the parts.

SOLDERING

The abbreviation "NS" indicates that a connection should not be soldered yet as other wires will be added. When the last wire is installed, the terminal should be soldered and the abbreviation "S" is used to indicate this. Note that a number will appear after each solder instruction. This number indicates the number of leads that are supposed to be connected to the terminal in point before it is soldered. For example, if the instruction reads, "Connect a wire to lug 1 (S-2)," it will be understood that there will be two wires connected to the terminal at the time it is soldered. (In cases where a wire passes through a terminal or lug and then connects to another point, it will count as two wires, one entering and one leaving the terminal.)

STEP-BY-STEP ASSEMBLY

CIRCUIT BOARD ASSEMBLY

( ) Locate the circuit board and position it as shown in Pictorial 1; then complete the steps around this Pictorial. Be sure to read Page 12 of the manual before beginning assembly of the kit.

START

( ) Install sixteen silicon diodes. Position the cathode end of each diode as shown. Solder and cut off the excess leads except the indicated lead of the first diode.

NOTE: PLACE SILICON DIODES WITH THE CATHODE END AS DIRECTED. THE CATHODE END MAY BE IDENTIFIED BY A COLOR DOT, COLOR END, OR COLOR BAND.

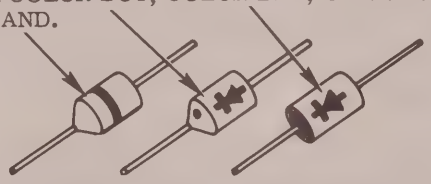

( ) Install the six 30 KΩ (30,000 Ω) 7 watt resistors. Use the 500 μμf (.0005 μfd) silver mica capacitor as a temporary spacer between each resistor and the circuit board. Solder and cut off the excess leads as each resistor is installed. Space these resistors so they do not touch the electrolytic capacitors, the circuit board, or each other.

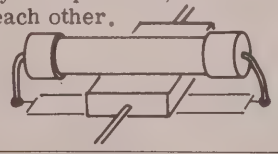

( ) Install the 700 Ω 7 watt resistor, using the 510 μμf silver mica capacitor as a temporary spacer between the resistors and circuit board. Solder and cut off the excess leads.

( ) In a like manner, install the 1 Ω 5 watt precision resistor, using the same capacitor as a spacer. Solder and cut off the excess leads.

( ) Install the 3600 Ω 1/2 watt precision resistor. Solder and cut off the excess leads.

PICTORIAL 1

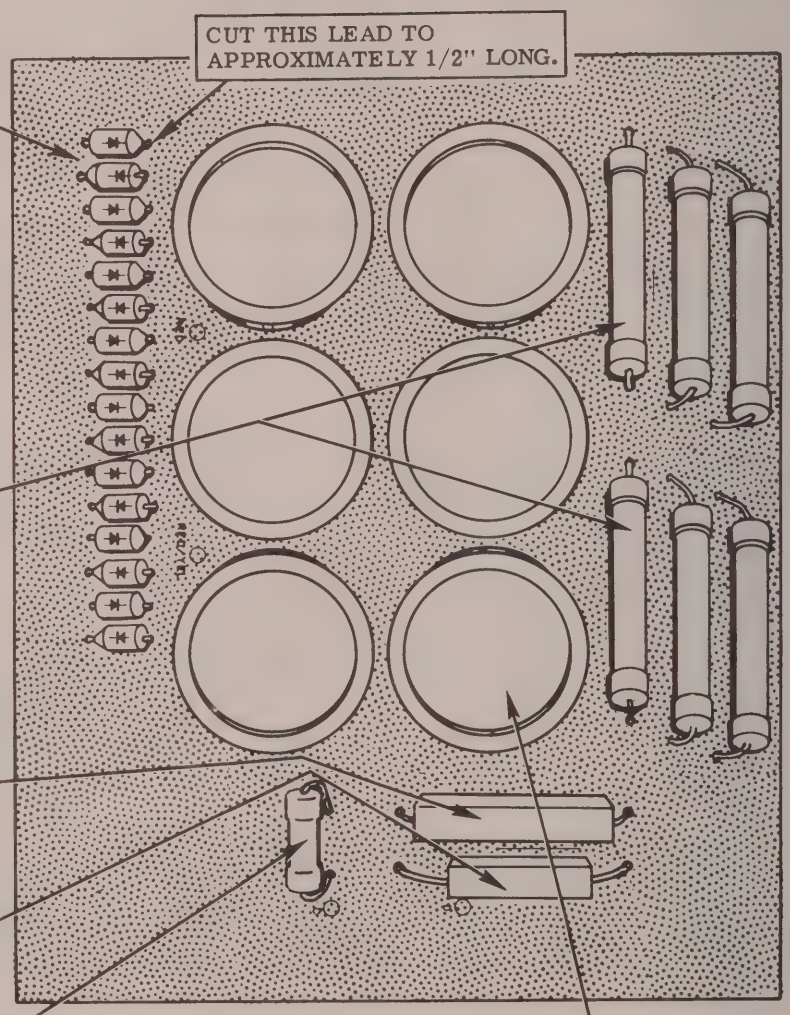

( ) Install the six 125 μfd electrolytic capacitors. Position the center lug in the large center hole and the four other lugs in outside holes in the circuit board for each capacitor. Bend the center lugs over against the foil and twist the outside lugs 1/8 turn. Solder all lugs which extend through foil.

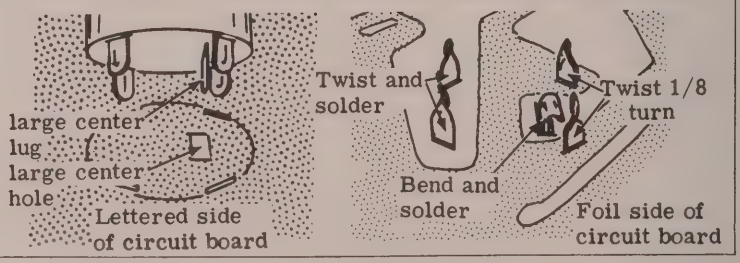

FINISH

PARTS MOUNTING-CHASSIS

Refer to Pictorial 2 (fold-out from page 12) for the following steps.

NOTE: Lockwashers and nuts will be used with all screws in mounting parts, unless stated otherwise in the assembly steps. Consequently, the following steps will call out only the size and type of hardware to be used. For example, the phrase "6-32 x 1/4" hardware" means to use 6-32 x 1/4" screws, #6 lockwashers, and 6-32 nuts.

( ) Refer to Detail 2A and install a phono socket on the rear chassis apron at T. Use 6-32 x 1/4" hardware. Position the phono socket as shown in the Pictorial. Bend lug 2 against the chassis as shown.

( ) Similarly, mount phono sockets at Y and Z, using 6-32 x 1/4" hardware. Do not bend lug 2 of these phono sockets against the chassis.

( ) Referring to Detail 2A, locate the ceramic insulator with the 6-32 stud and cut off the tip as shown.

( ) Mount the ceramic insulator at U. Use a #6 lockwasher and a 6-32 nut.

( ) Referring to Detail 2B, install the 10-24 x 1-1/8" phillips head screw at W. Use #10 lockwashers, a 10-24 nut, 3/4" flat steel washers, and a 10-24 wingnut.

( ) Referring to Detail 2C, install the coaxial socket at X. Use 4-40 x 5/16" hardware in the two holes shown. The remaining hardware for this socket will be installed later.

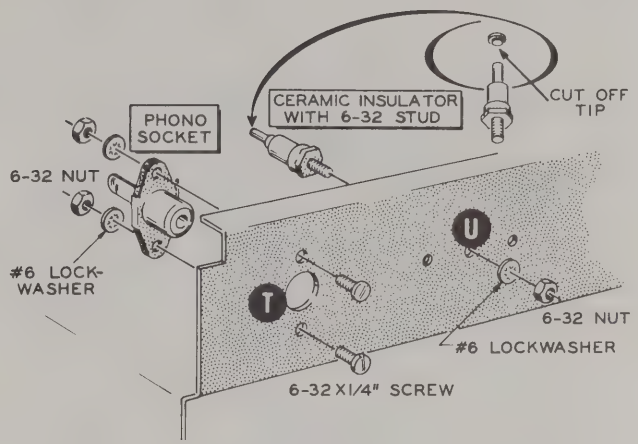

Detail 2A

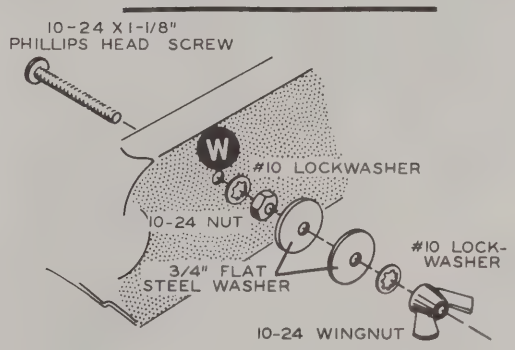

Detail 2B

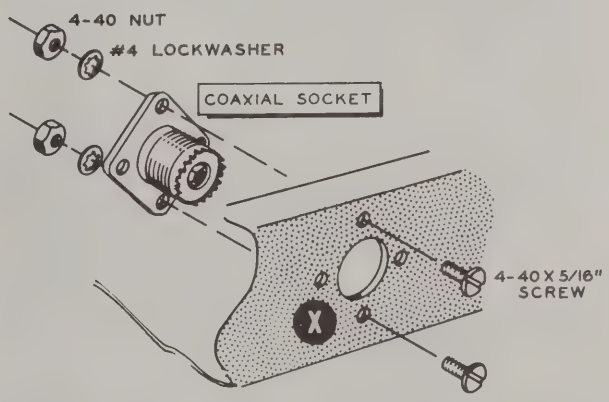

Detail 2C

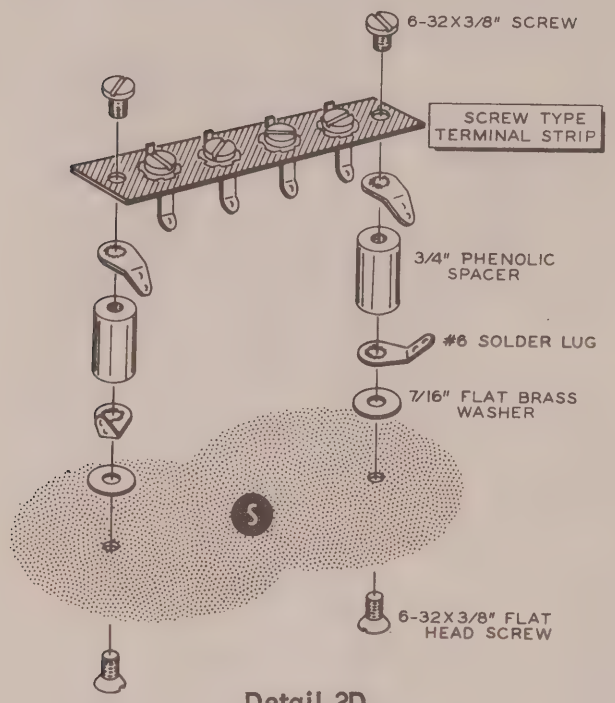

Detail 2D

( ) Refer to Detail 2D and secure two 3/4" phenolic spacers at S. Use #6 solder lugs, 7/16" flat brass washers, and 6-32 x 3/8" flat head screws. Do not overtighten the screws as the spacer threads could be stripped.

( ) Secure the screw type terminal strip to the other end of the phenolic spacers, using #6 solder lugs and 6-32 x 3/8" screws.

( ) Referring to Detail 2E, install the motor to the chassis. Use 3/8" grommets, 7/16" flat brass washers, 1/2" fiber shoulder washers, and 10-32 x 1/2" screws. Position the motor as shown in the Pictorial.

( ) Locate the fan blade and start a 6-32 x 1/4" setscrew into the fan bushing.

( ) Place the fan blade over the motor shaft so the shaft is flush with the edge of the fan blade bushing. Then tighten the setscrew.

( ) Referring to Detail 2F, install the relay (#69-5) at L. Use a 5/16" rubber grommet, three 1/2" fiber flat washers, and a 6-32 x 5/8" screw.

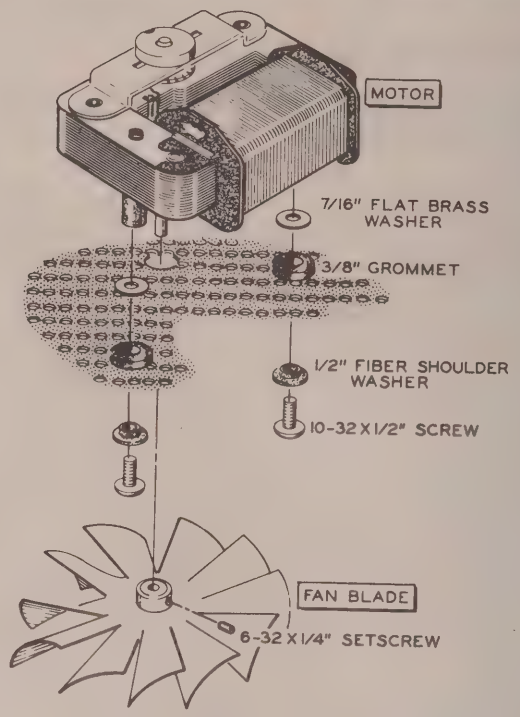

Detail 2E

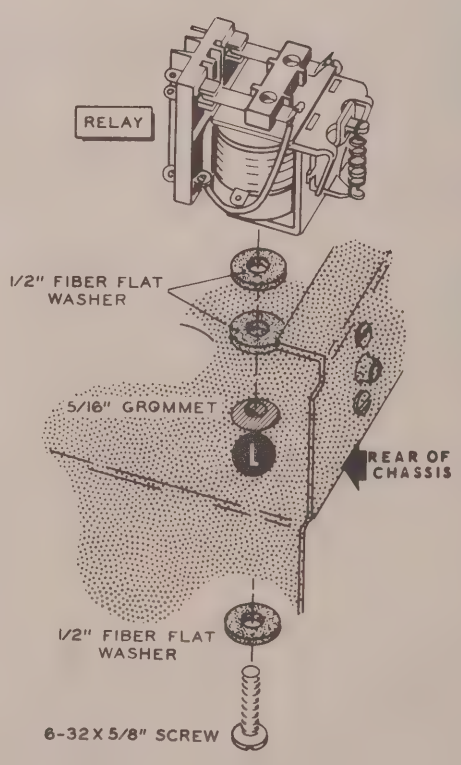

Detail 2F

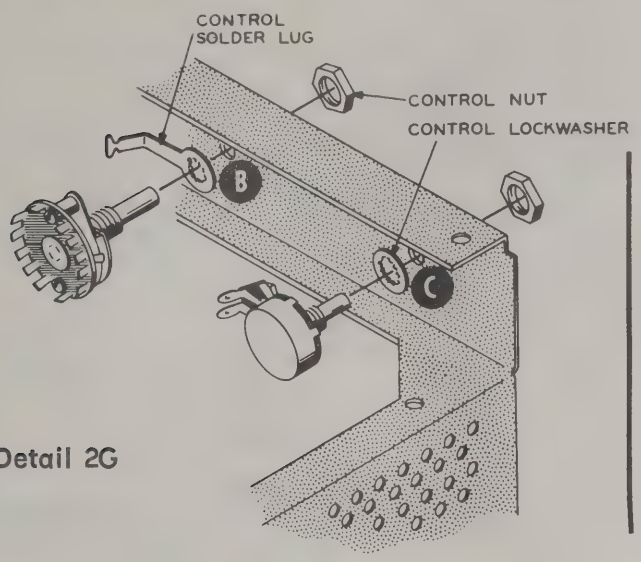

Detail 2G

( ) Refer to Detail 2G and install a 100 KΩ control (#10-12) at C, using a control lockwasher and a control nut. Position the control lugs as shown.

( ) Similarly, install the 1-wafer rotary switch (#63-352) at B. Use a control solder lug and a control nut. Position the switch lugs and solder lug as shown in the inset drawing in Pictorial 2.

NOTE: Be sure to keep the plates of the variable capacitors fully meshed (closed) at all times to prevent damage during handling.

( ) Referring to Detail 2H, install the 2-section variable capacitor (#26-97) on the top of the chassis at D. Use #6 lockwashers, 6-32 nuts and two #6 solder lugs at the locations shown.

( ) Referring to Detail 2J, install the DPST rocker switch at A. Use 6-32 x 3/8" flat head hardware. Be sure to position the switch lugs as shown. Operate the rocker switch to see that it functions properly.

( ) Install a 5/16" rubber grommet at F.

( ) Install a 1/2" rubber grommet at P.

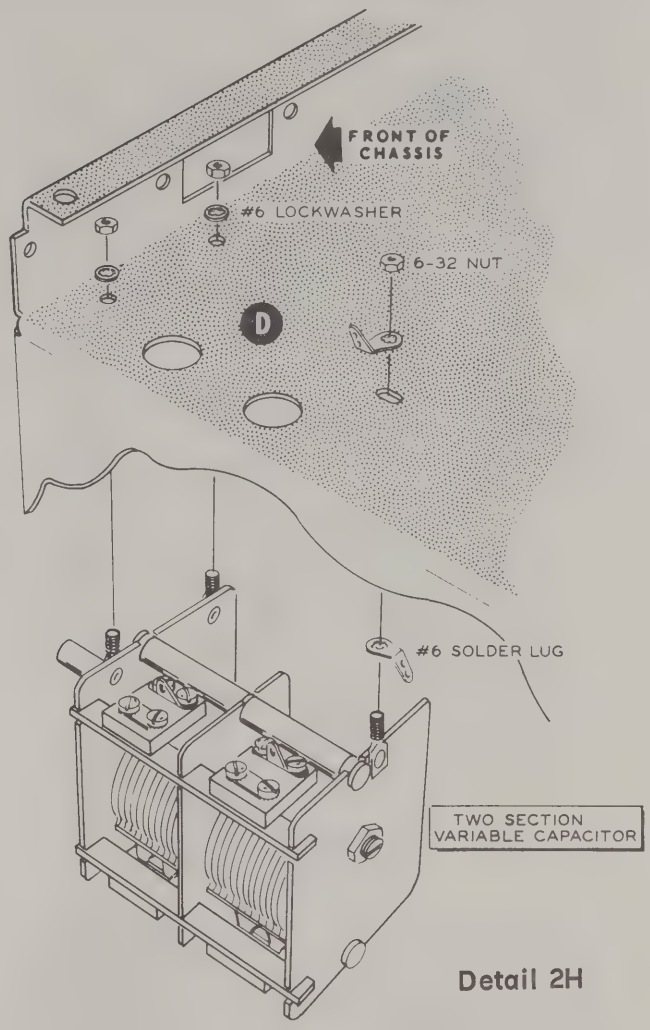

Detail 2H

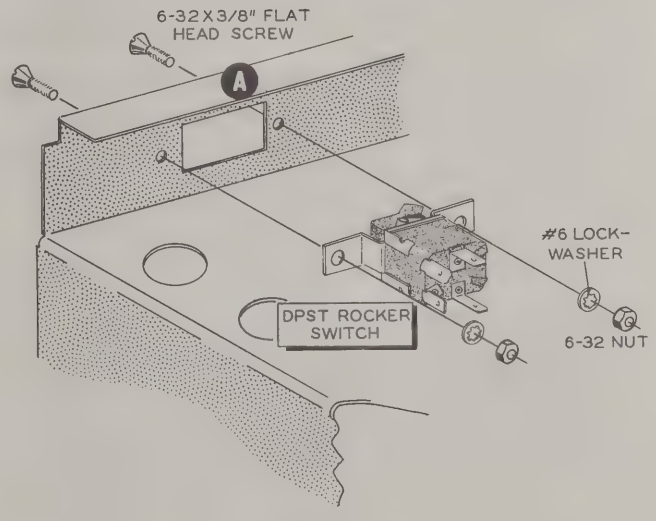

Detail 2J

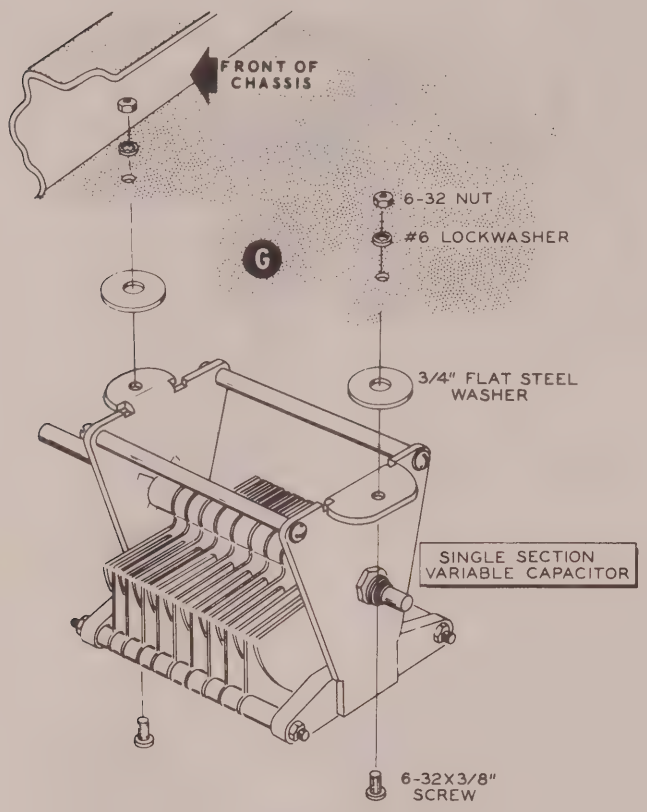

Detail 2K

( ) Install the 1-section variable capacitor (#26-96) on top of the chassis at G. Use 6-32 x 3/8" hardware with two 3/4" flat steel washers as shown in Detail 2K. Position the capacitor as shown.

Refer to Detail 2L for the following steps.

( ) Locate the power transformer and cut the leads to the following lengths. Measure the leads from where they come out of the transformer.

LEAD COLOR	LENGTH
Either green	9-1/2"
Other green	8"
Either blue	7-1/2"
Red-yellow	7"
Black-red	6"

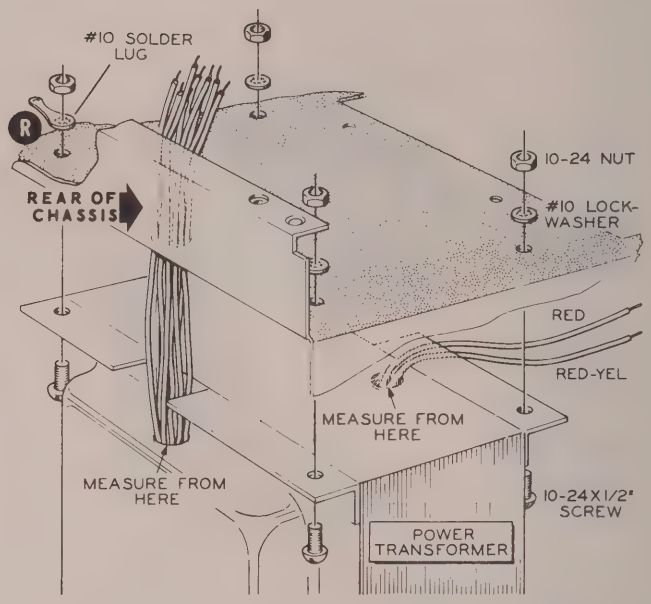

Detail 2L

LEAD COLOR	LENGTH
Black	6-1/2"
Red	5-1/2"
Other blue	3"
Black-green	3"
Black-yellow	3"
Green-yellow	3"

( ) Strip 1/4" insulation from the end of each transformer lead. Melt a small amount of solder on the exposed lead end to hold the small wire strands together.

( ) Position the power transformer as shown. Place the chassis over the top of the transformer with the red and the red-yellow leads toward the front of the chassis and the remaining leads through the large hole in the chassis as shown.

( ) Secure the power transformer to the chassis, using 10-24 x 1/2" hardware with a #10 solder lug at R.

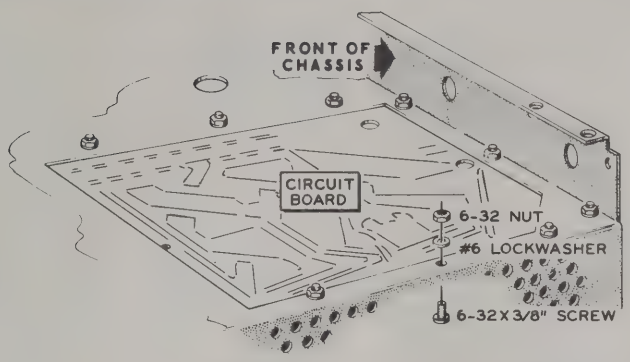

Detail 2M

( ) Referring to Detail 2M, install the circuit board on the top of the chassis, using 6-32 x 3/8" hardware. Be sure to position the circuit board as shown.

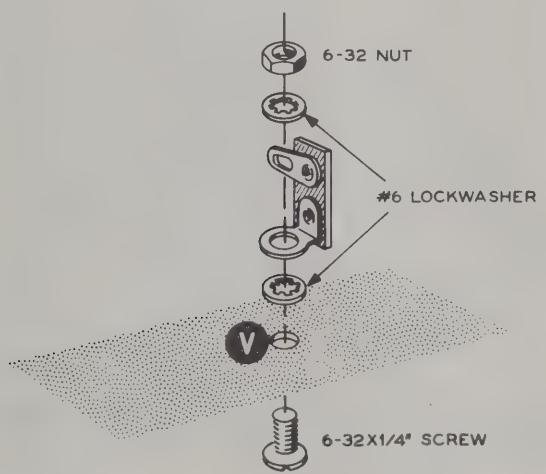

Detail 2N

( ) Referring to Detail 2N, install a 1-lug terminal strip at V, using 6-32 x 1/4" hardware. Position the terminal strip as shown.

Temporarily set the chassis aside.

PARTS MOUNTING-RF SHIELD

Refer to Pictorial 3 (fold-out from Page 21) for the following steps.

( ) Locate the RF shield and position it as shown.

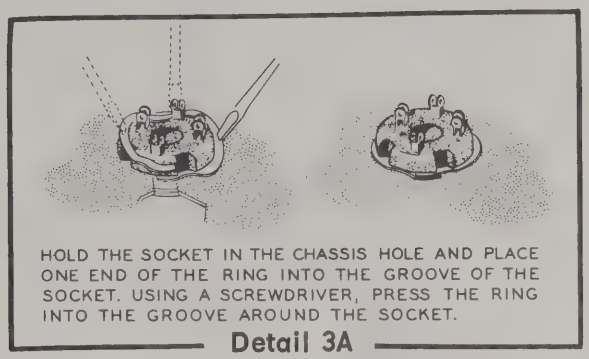
HOLD THE SOCKET IN THE CHASSIS HOLE AND PLACE ONE END OF THE RING INTO THE GROOVE OF THE SOCKET. USING A SCREWDRIVER, PRESS THE RING INTO THE GROOVE AROUND THE SOCKET.

Detail 3A

( ) Referring to Detail 3A, install 4-lug tube sockets at V1 and V2, using socket rings. Place each socket so lug 1 is positioned as shown in the Pictorial.

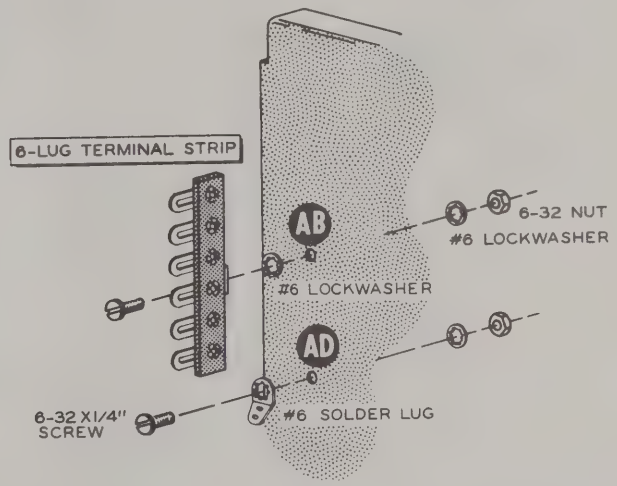

Detail 3B

( ) Refer to Detail 3B and install a 6-lug terminal strip at AB. Use 6-32 x 1/4" hardware.

( ) Install #6 solder lugs at AD and AC, using 6-32 x 1/4" hardware.

( ) Install pairs of #6 solder lugs at AE and AF, using 6-32 x 1/4" hardware. Be sure to position the solder lugs as shown in the Pictorial.

( ) Locate the 3-wafer rotary switch (#63-351) and slide the rear wafer off the switch shaft.

( ) Place a control lockwasher on the knob end of the shaft.

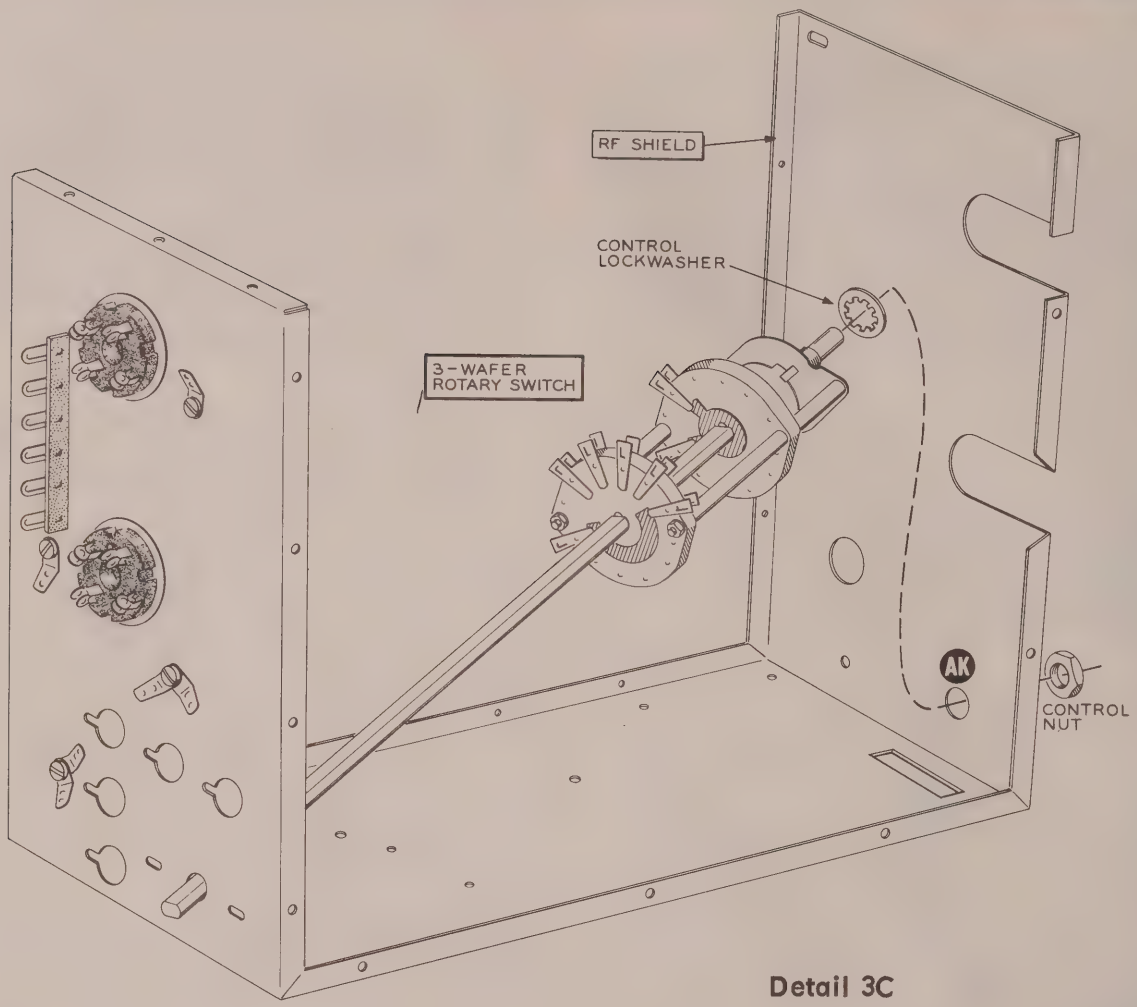

Detail 3C

( ) Referring to Detail 3C, position the switch as shown in the RF shield. Place the shaft through the hole in the rear of the bracket and then position the knob end of the switch through hole AK as shown.

( ) Temporarily secure the switch to the RF shield with a control nut. Do not tighten the control nut at this time.

( ) Turn the shaft of the switch fully counter-clockwise.

( ) Referring to Detail 3D, install the rear wafer of the switch on the bracket by removing one nut and one lockwasher from each mounting screw. This should leave one lockwasher and nut on each mounting screw. Position the movable wiper of this wafer as shown and place a 3/8" flat steel washer on each mounting screw.

( ) Secure the rear wafer of the switch to the RF shield with 3/8" flat steel washers and the switch hardware as shown. Be sure the notch of the rear wafer rotor is aligned with the notch of the rotors of the other two wafers.

( ) Now tighten the control nut securing the switch at AK.

( ) Refer to Detail 3E, and mount a #6 solder lug at AJ on the RF shield with a 6-32 x 1/4" screw and a 6-32 nut. Position the solder lug as shown.

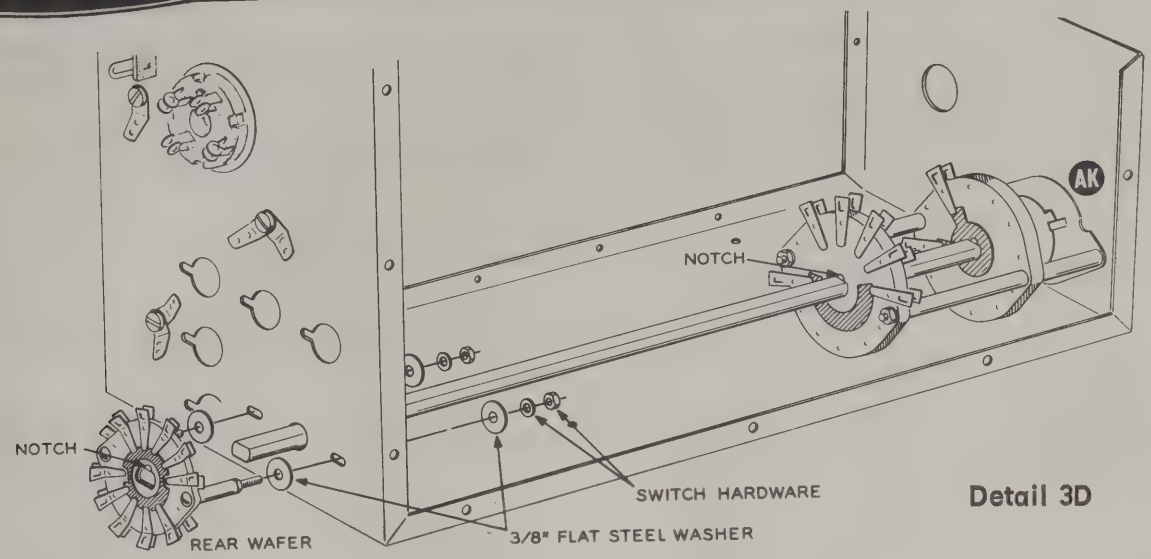

Detail 3D

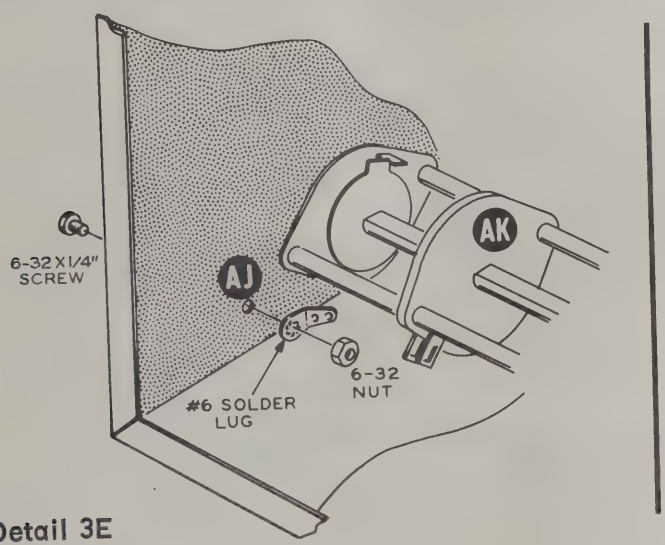

Detail 3E

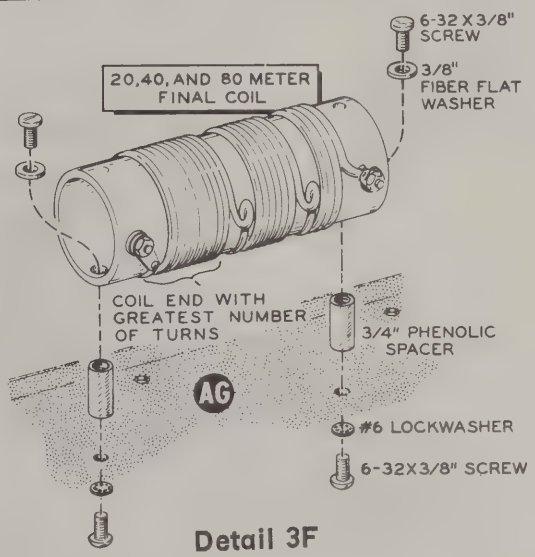

Detail 3F

Refer to Detail 3F for the following steps.

NOTE: Do not overtighten the phenolic spacers in the following steps, as the threads could strip out easily.

( ) Install 3/4" phenolic spacers to the indicated side of the 20, 40, and 80 meter final coil (#40-597). Use 6-32 x 3/8" screws and 3/8" fiber flat washers as shown.

( ) Now mount this final coil to the RF shield bracket at AG, using 6-32 x 3/8" screws and #6 lockwashers. Be sure to position the end with the most turns toward tube sockets V1 and V2.

( ) Referring to Detail 3G, install the circuit breaker mounting bracket on the RF shield, using 6-32 x 1/4" hardware with a #6 solder lug at AH.

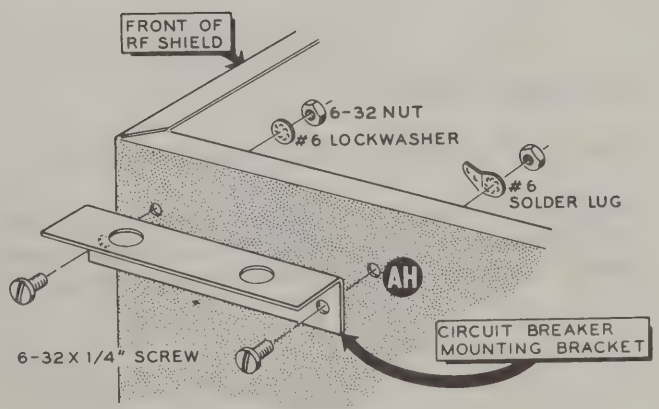

Detail 3G

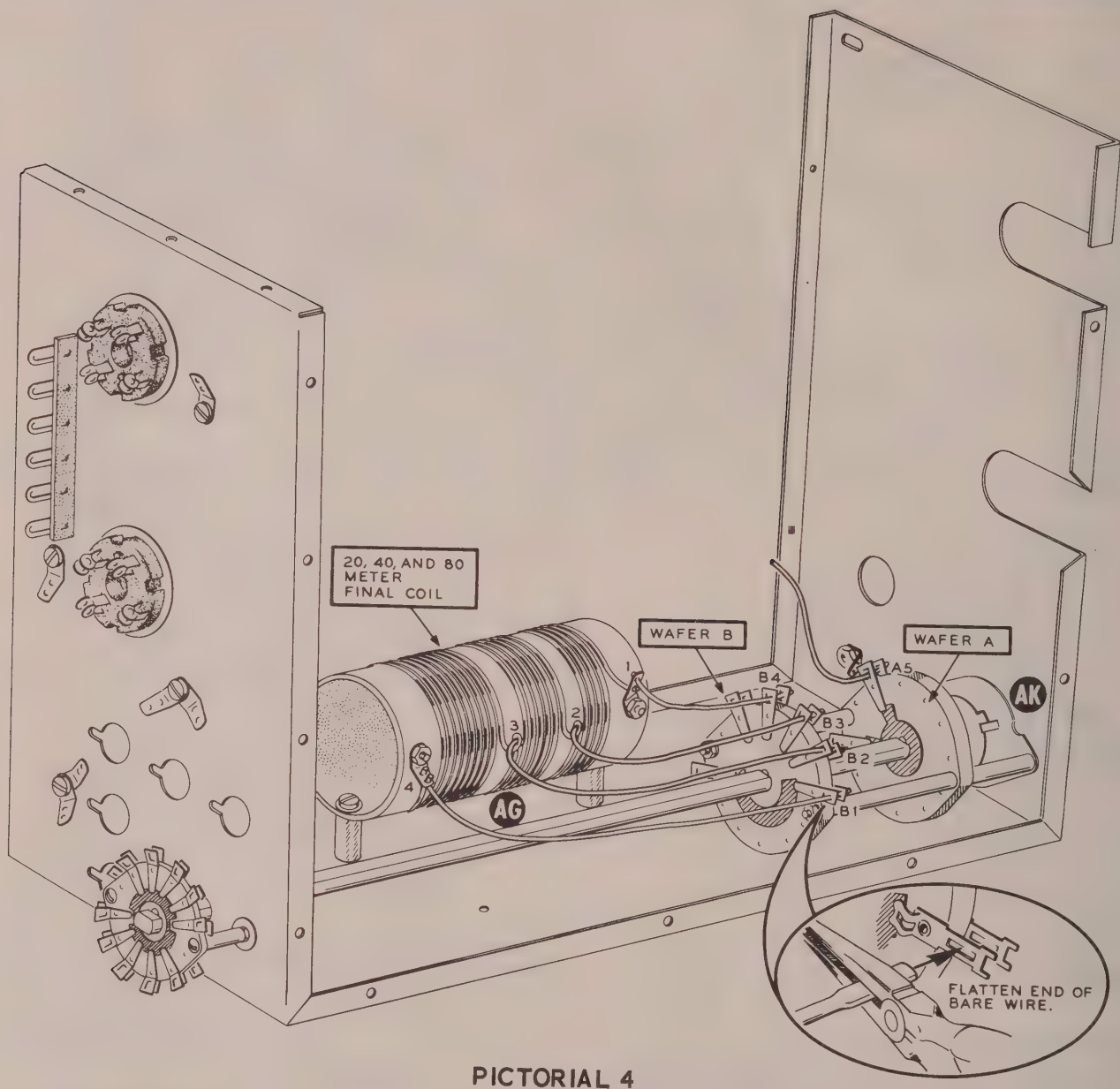

PICTORIAL 4

WIRING-RF SHIELD

Refer to Pictorial 4 for the following steps.

NOTE: The bare wire is too large to fit into the switch lugs. Therefore the end going to the switch lugs should be flattened as shown in the inset drawing of the Pictorial. Pass the wire through both lugs at each position on the switch. Do not attempt to bend this wire around the coil or switch lugs as the coil or switch could be damaged. When soldering connections at switch AK, be sure to solder both lugs at each connection.

( ) Connect a 2" bare wire from lug 1 of coil AG (S-1) to lugs B4 of switch AK (NS).

( ) Connect a 3" bare wire from lug 2 of coil AG (S-1) to lugs B3 of switch AK (S-1).

( ) Connect a 4-1/4" bare wire from lug 3 of coil AG (S-1) to lugs B2 of switch AK (S-1).

( ) Connect a 5-1/2" bare wire from lug 4 of coil AG (S-1) to lugs B1 of switch AK (NS).

( ) Connect one end of a 2" bare wire to lugs A5 of switch AK (S-1). The other end will be connected later.

Refer to Detail 4A for the following steps.

( ) Connect a 1-1/2" bare wire from solder lug AJ (S-1) to lugs A7 of switch AK (S-1).

( ) Connect a 500 $\mu\mu$f (.0005) 2 KV silver mica capacitor from solder lug AH (S-1) to lugs B7 of switch AK (S-1).

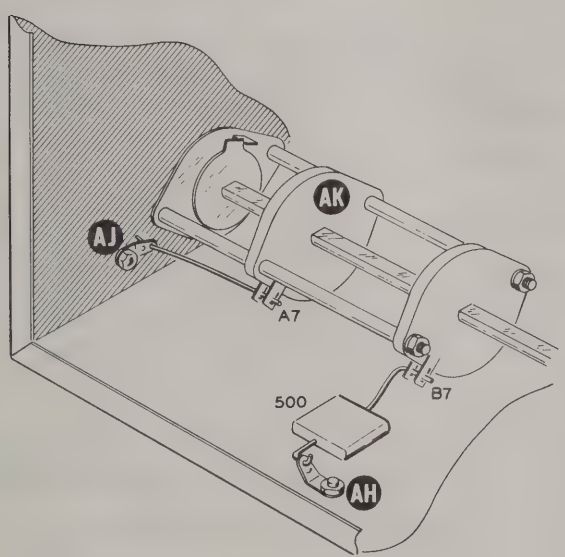

Detail 4A

Refer to Detail 4B for the following steps.

( ) Locate the 10 and 15 meter final coil (#40-596). Pass the center wire of this coil through lugs B5 of switch AK (NS).

( ) Position a tapered spacer between the RF shield and the coil.

( ) Position the end of the coil, opposite the solder lug, between lugs B4 of switch AK (S-2). It may be necessary to reshape the center wire to make the coil end fit properly between the switch lugs.

( ) Now solder lugs B5 of switch AK (S-1). Cut off any excess from the center wire.

( ) Remove the tapered spacer.

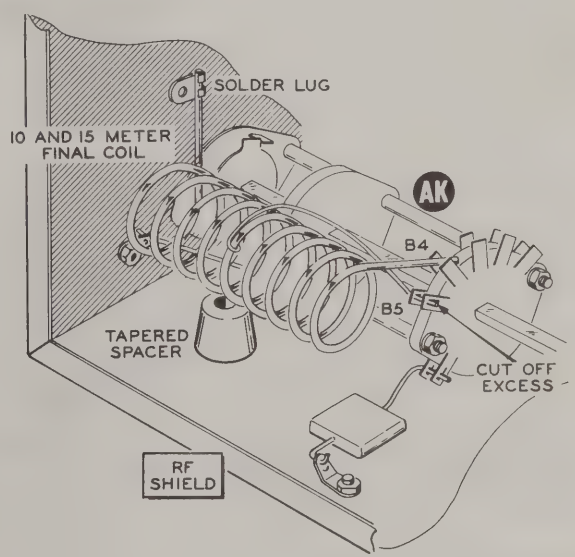

Detail 4B

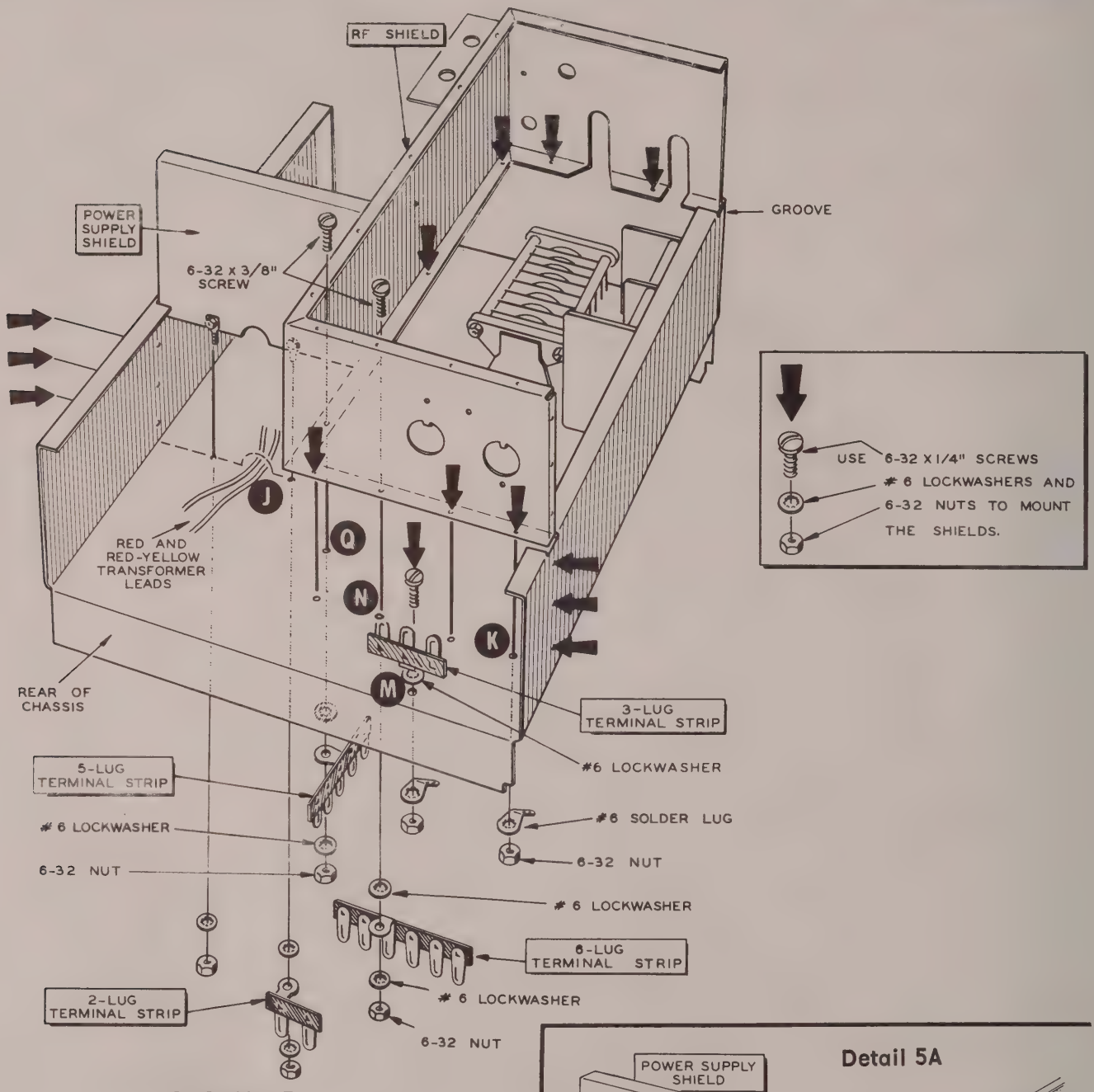

PICTORIAL 5

Refer to Detail 5A and Pictorial 5 for the following steps.

( ) Install 6-32 spade bolts on the power supply shield at the locations shown. Use 6-32 x 1/4" hardware. Position the offset in each spade bolt as shown.

( ) Install the power supply shield on the RF shield, using 6-32 x 1/4" hardware.

Detail 5A

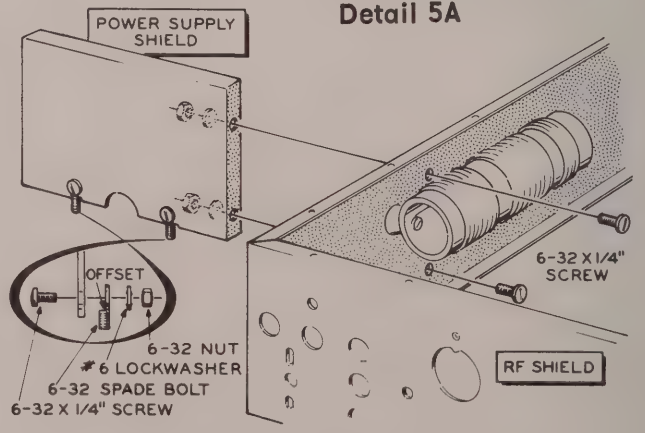

Refer to Pictorial 5 for the following steps.

( ) Position the chassis as shown and fit the RF and power supply shield assembly down on the chassis. Be sure to position the red and red-yellow power transformer leads in the notch of the power supply shield.

( ) Secure the RF shield to the chassis. Use 6-32 x 1/4" hardware at all holes indicated by the arrows, with a #6 solder lug at K.

( ) Install a 6-lug terminal strip at N and a 5-lug terminal strip at Q, using 6-32 x 3/8" hardware. It will be easier to perform this step if the chassis is tipped up on the side next to the transformer. If available, use a magnetized screwdriver to start screws in the hard-to-reach locations.

( ) Secure the power supply shield to the chassis, using 6-32 x 1/4" hardware in the holes indicated by the arrows, and #6 lockwashers and 6-32 nuts on the spade bolts with a 2-lug terminal strip at J.

( ) Install a 3-lug terminal strip at M on top of the chassis and a #6 solder lug at M on the bottom of the chassis. Use 6-32 x 1/4" hardware.

WIRING-CHASSIS BOTTOM

Refer to Pictorial 6 (fold-out from Page 22) for the following steps.

( ) Position the two green power transformer leads through grommet P for connection later.

Connect the remaining power transformer leads as follows:

( ) Black-green to lug 2 of terminal strip S (S-1).

( ) Black-yellow to lug 3 of terminal strip S (NS).

( ) Green-yellow to ground lug 8 of terminal strip S (NS).

( ) Shorter blue to ground lug 8 of terminal strip S (NS).

( ) Longer blue to lug 5 of terminal strip Q (NS).

( ) Black to lug 4 of terminal strip Q (NS).

( ) Black-red to lug 2 of terminal strip Q (NS).

( ) Position the transformer leads as shown.

NOTE: Use the small solid hookup wire in all wiring steps, unless directed otherwise. Cut the specified color of wire to the length given in the step. Then strip 1/4" of insulation from each wire end, unless directed otherwise.

( ) Strip 1/2" of insulation from one end and 1/4" of insulation from other end of a 4-1/4" gray wire.

( ) At the end of this wire with the most insulation removed, pass the wire through lug 10 (S-2) to lug 9 (S-1) of switch B. Connect the other end of the wire to lug 2 of control C (S-1).

( ) Connect a 2-1/2" gray wire from lug 13 of switch B (S-1) to lug 3 of control C (S-1).

( ) Strip 2-3/4" of insulation from one end and 1/4" of insulation from the other end of a 5" gray wire.

( ) At the end with the most insulation removed, pass the wire through lug 3 (S-2), through lug 4 (S-2), through lug 5 (S-2), and through lug 8 (S-2) of switch B to the control solder lug (NS). Connect the other end of the wire to lug 1 of control C (S-1). Be sure the bare portion of the wire does not touch any other lugs or the switch assembly bolt.

( ) Connect one end of a 9" gray wire to lug 6 of switch B (S-1). Pass the other end through hole H in the circuit board for connection later.

( ) Connect one end of a 7" red wire to lug 12 of switch B (S-1). Pass the other end through hole H in the circuit board for connection later.

( ) Connect one end of a 4" yellow wire to lug 2 of switch B (S-1). Pass the other end through hole H in the circuit board for connection later.

( ) Connect a 4-3/4" yellow wire from lug 2 of terminal strip N (NS) to lug 4 of relay L (S-1).

( ) Connect a 4" yellow wire from lug 5 of terminal strip N (NS) to lug 3 of relay L (NS).

( ) Connect a 3" yellow wire from lug 6 of terminal strip N (NS) to the lug of terminal strip V (NS).

( ) Connect one end of a 7" green wire to lug 1 of terminal strip N (NS). Pass the other end through grommet P for connection later.

( ) Referring to the inset drawing of Pictorial 6, connect one end of a 10" large blue wire to the diode lead (point A) extending from the circuit board (S-1). Pass the other end through grommet F for connection later. Cut off the excess diode lead.

( ) Locate the cable assembly and position it on the chassis as shown.

Connect the wires from BO (Breakout) #1 to switch A as follows:

( ) Shorter red to lug 1 (S-1).

( ) Longer red to lug 2 (S-1).

( ) Shorter black to lug 3 (S-1).

( ) Longer black to lug 4 (S-1).

( ) Pass all the wires from BO#2, except the blue, green, yellow, and the two shielded cables, down through hole H in the circuit board for connection later.

Connect the wires from BO#2 to switch B as follows:

( ) Green to lug 1 (S-1).

( ) Yellow to lug 7 (S-1).

NOTE: When soldering the shielded cable connections, do not overheat the connection as the insulation on the inner conductor will melt and permit a short to the shield. It may be easier to make these connections if the switch nut is loosened and the switch turned temporarily. Return the switch to the proper position after the connections are soldered.

( ) Inner lead of the unmarked shielded cable to lug 15 (S-1) and the shield to the control solder lug (NS).

( ) Inner lead of the shielded cable with red band to lug 14 (S-1) and the shield to the control solder lug (S-3).

( ) Blue to lug 11 (S-1).

( ) Connect the blue wire from BO#3 to lug 2 of terminal strip J (NS).

Connect the wires from BO#4 to terminal strip Q as follows:

( ) Red to lug 2 (S-2).

( ) Both black to lug 4 (S-3).

( ) Inner lead from the shielded cable to lug 1 (NS) and the shield to lug 3 (NS).

Connect the following wires from BO#5 to terminal strip S.

( ) Yellow to lug 7 (NS).

( ) Red to lug 4 (NS).

( ) Small black to lug 3 (S-2).

( ) Large black to lug 1 (NS).

( ) Violet to lug 6 (NS).

( ) Pass the violet, gray, brown, and white wires from BO#6 through grommmet P for connection later.

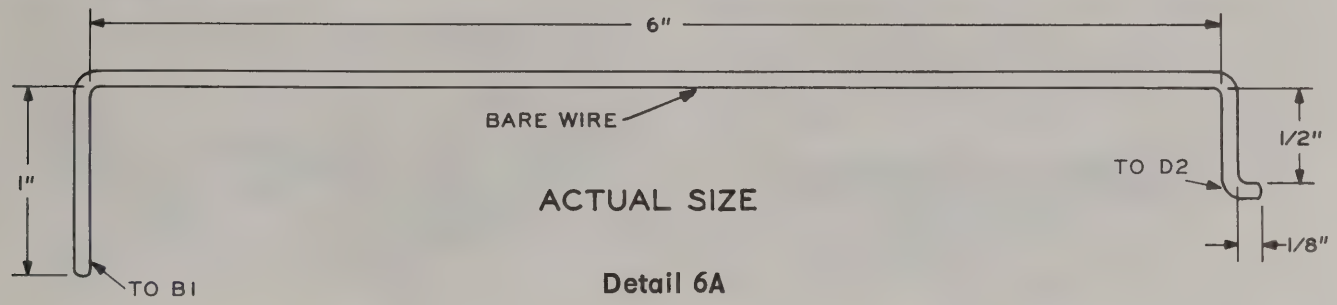

Detail 6A

Connect the following wires from BO#6 to terminal strip N.

( ) Inner lead of the shielded cable to lug 3 (NS) and the shield to lug 4 (NS).

( ) Both yellow to lug 2 (NS).

( ) Green to lug 1 (NS).

( ) Twist together the two black wires from BO#6 as shown. Connect either wire to position 1 (S-1) and the other to position 2 (S-1) on the motor. Pass the wire ends through the holes in the coil form and solder them directly to the solder connections on the motor.

( ) Referring to Detail 6A, bend a length of bare wire to the shape shown. The Detail is full-size and may be used as a pattern.

( ) Connect this formed bare wire from lugs B1 of switch AK (S-2) to lug 2 of variable capacitor D (S-1).

( ) Referring to Detail 6B, bend a length of bare wire to the shape shown. The Detail is full-size and may be used as a pattern.

( ) Connect this formed bare wire from the bare wire near lug 2 of variable capacitor D (S-1) to lug 1 of variable capacitor D (S-1). Bend lug 1 of D as shown.

CAUTION: Be sure the bare wires just installed do not touch the chassis.

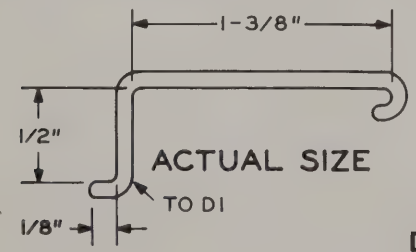

Detail 6B

( ) Referring to Detail 6C, prepare a 9-1/2" length of large (RG-58A/U) shielded cable.

( ) At either end of the prepared cable, connect the inner lead to lug 7 of relay L (S-1) and the shield to solder lug K (NS).

( ) At the other end of the cable, connect the inner lead to the bare wire near lug 2 of variable capacitor D (S-1) and the shield to solder lug E (NS), as shown.

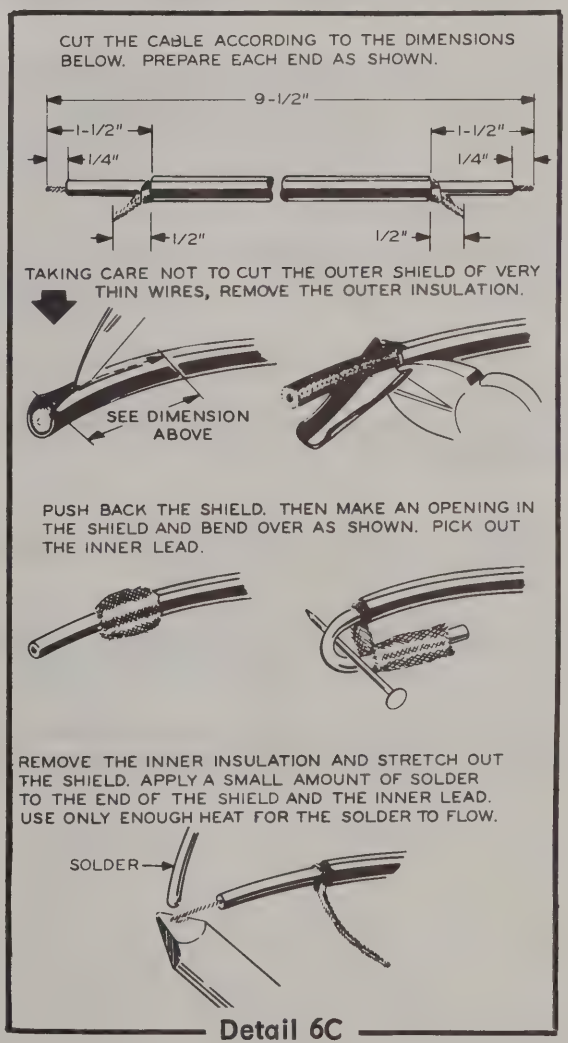
CUT THE CABLE ACCORDING TO THE DIMENSIONS BELOW. PREPARE EACH END AS SHOWN.
9-1/2"
1-1/2"
1-1/2"
1/4"
1/4"
1/2"
1/2"
TAKING CARE NOT TO CUT THE OUTER SHIELD OF VERY THIN WIRES, REMOVE THE OUTER INSULATION.
SEE DIMENSION ABOVE
PUSH BACK THE SHIELD. THEN MAKE AN OPENING IN THE SHIELD AND BEND OVER AS SHOWN. PICK OUT THE INNER LEAD.
REMOVE THE INNER INSULATION AND STRETCH OUT THE SHIELD. APPLY A SMALL AMOUNT OF SOLDER TO THE END OF THE SHIELD AND THE INNER LEAD. USE ONLY ENOUGH HEAT FOR THE SOLDER TO FLOW.
SOLDER

Detail 6C

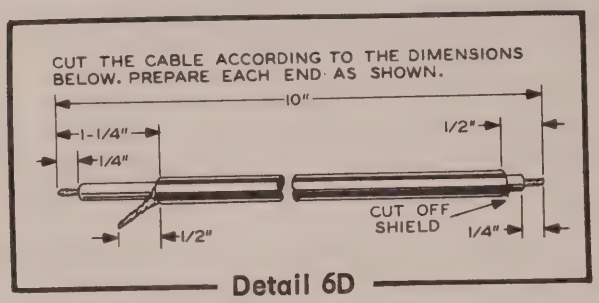

Detail 6D

( ) Referring to Detail 6D, prepare a 10" length of large (RG-58A/U) shielded cable.

( ) At the end of the prepared cable with the shield, connect the inner lead to lug 8 of relay L (S-1) and the shield to solder lug K (S-2).

( ) Pass the other end of the cable behind relay L and through grommet P for connection later.

( ) Connect the 1.1 mh RF choke (#45-4) from the bare wire connected between lug B1 of switch AK and lug 2 of variable capacitor D (S-1), to solder lug E (S-2). Position the choke as shown.

( ) Connect a .02 μfd disc capacitor between lugs 3 (NS) and 4 (NS) of terminal strip N.

Refer to Pictorial 7 for the following steps.

NOTE: All resistors are 1/2 watt, unless specified otherwise.

( ) Connect a 4700 Ω (yellow-violet-red) resistor from lug 1 of phono socket Z (NS) to lug 6 of terminal strip S (S-2).

( ) Connect a .02 μfd disc capacitor between lugs 1 (S-2) and 2 (S-1) of phono socket Z.

( ) Connect a .02 μfd disc capacitor between lugs 1 (NS) and 2 (S-1) of phono socket Y.

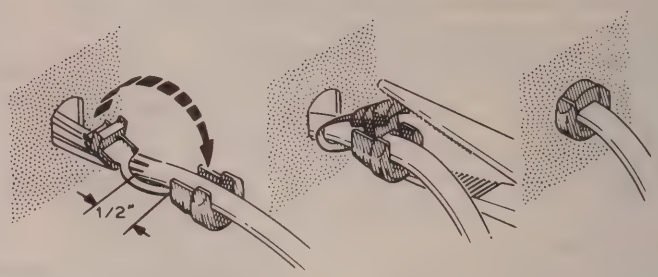

Detail 7A

( ) Connect a .005 μfd 1.4 KV disc capacitor between lugs 5 (NS) and 1 (NS) of terminal strip S.

( ) Connect a .005 μfd 1.4 KV disc capacitor between lugs 4 (NS) and 8 (S-3) of terminal strip S.

( ) Locate the line cord and separate the three leads for 4".

( ) Referring to Detail 7A, install the line cord in the large hole in the rear corner of the chassis. Use the line cord strain relief. Position the strain relief approximately 1/2" from the point where the wires separate.

Connect the leads of the line cord to terminal strip S as follows. Cut each lead to the required length to reach its connecting point.

( ) Green to lug 5 (S-2).

( ) Either gray to lug 1 (S-3).

( ) Other gray to lug 4 (S-3).

( ) Connect a 33 Ω 1 watt (orange-orange-black) resistor from lug 1 of phono socket Y (S-2) to lug 7 of terminal strip S (S-2).

( ) Connect a .02 μfd disc capacitor between lugs 1 (NS) and 3 (NS) of terminal strip Q.

( ) Connect the positive (+) lead of a 20 μfd electrolytic capacitor to lug 3 of terminal strip Q (S-3) and the other lead to lug 5 of terminal strip N (NS). Use small sleeving on the lead to terminal strip N.

NOTE: WHEN INSTALLING SILICON DIODES, THE CATHODE END SHOULD BE PLACED AS DIRECTED. THE CATHODE END IS MARKED WITH EITHER A COLOR END, COLOR DOT OR COLOR BAND. IN THE ILLUSTRATION, THE SYMBOL K INDICATES THE CATHODE END.

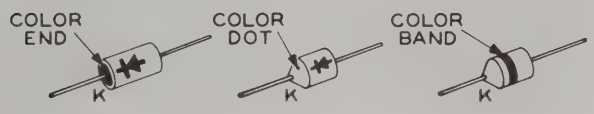

Detail 7B

( ) Referring to Detail 7B, connect the lead from the cathode end of a silicon diode (large body) to lug 6 (S-2) and the other lead to lug 5 (NS) of terminal strip N.

( ) Connect the positive (+) lead of a 2 μfd electrolytic capacitor to lug 4 (NS) and the other lead to lug 2 (NS) of terminal strip N.

( ) Connect a 10 KΩ (brown-black-orange) 2 watt resistor between lugs 4 (S-4) and 5 (S-4) of terminal strip N.

( ) Connect a 1.5 Ω (brown-green-gold-silver) resistor between lugs 2 (NS) and 1 (S-3) of terminal strip N.

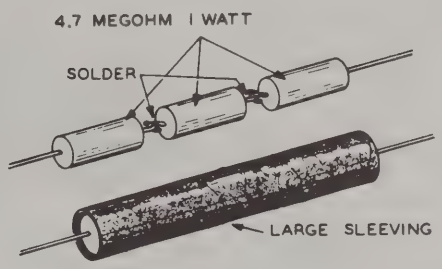

Detail 7C

( ) Referring to Detail 7C, prepare a resistor combination, using three 4.7 megohm (yellow-violet-green) 1 watt resistors and the large sleeving.

( ) Connect this resistor combination from lug 2 of terminal strip J (NS) to point B on the foil of the circuit board. Solder the lead directly to the foil. Use sleeving on the lead to the circuit board.

( ) Connect a 15 KΩ (brown-green-orange) resistor between lugs 1 (S-1) and 2 (S-3) of terminal strip J.

This Linear Amplifier may be operated from either 120 volts or 240 volts AC. Perform one of the following two steps, depending on the line voltage to be used. Refer to the inset drawing on Pictorial 7.

( ) For 120 volt AC operation, connect one bare wire under screws 1 and 2, and another bare wire under screws 3 and 4 of terminal strip S.

( ) For 240 volt AC operation, connect a bare wire under screws 2 and 3 of terminal strip S.

Detail 8A

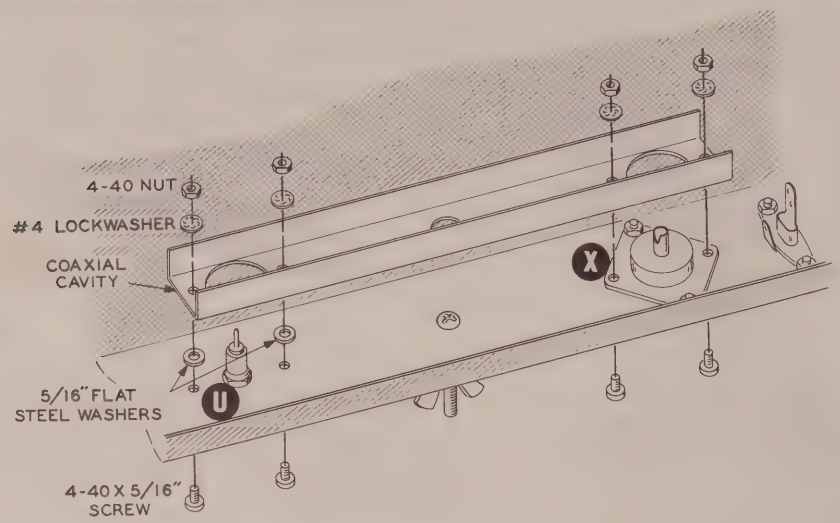

WIRING-SWR BRIDGE

NOTE: Position the chassis on the rear apron for the following steps.

( ) Referring to Pictorial 8 and Detail 8A, install the coaxial cavity, using 4-40 x 5/16" hardware and two 5/16" flat steel washers. Be sure no wires are pinched between the cavity and the chassis.

Refer to Pictorial 8 and Detail 8B for the following steps.

( ) Slide the three plastic spacers on the RF driver element. Be sure the two small holes in each spacer are position correctly. Position the spacers approximately as shown.

( ) Insert the two RF pickup elements through the plastic spacers as shown.

( ) Position this assembly in the coaxial cavity with a 3/16" spacer on coax socket X.

( ) Referring to the inset drawing of Detail 8B, solder the RF driver element to coax socket X (S-1) and standoff U (S-1).

( ) Referring to the inset drawing on Pictorial 8, cut the flexible lead at lug 10 of relay L. Cut the lead as close to the lug as possible.

( ) Carefully remove the sleeving from this lead. Then cut the lead to 1-1/4" and the sleeving to 1" in length. Replace the sleeving on the lead.

Detail 8B

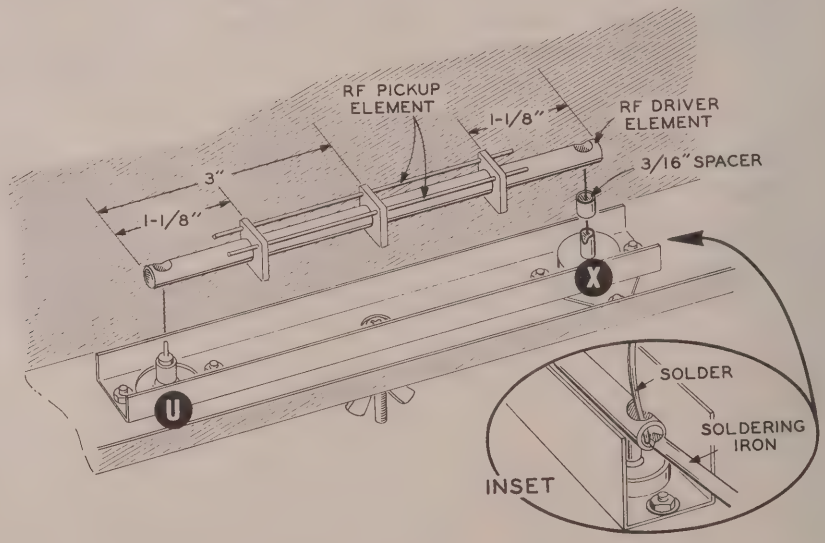

( ) Connect this lead to lug 1 of phono socket T (S-1).

( ) In a like manner, cut the flexible lead at lug 9 of relay L.

( ) Remove the sleeving from this lead. Then cut the lead to 1-1/4" and the sleeving to 1" in length. Replace the sleeving on this lead.

( ) Connect the end of this lead in the hole at 5 of the RF driver element (S-1).

( ) Connect a 1-1/2" bare wire between lugs 5 (S-1) and 6 (S-1) of relay L. Be sure this wire is positioned below the top edge of the relay so it will not short to the cabinet later.

NOTE: When soldering leads to the RF pickup elements in the next four steps, slide the plastic spacer away from the area being soldered. Then, reposition the spacer after the connection has cooled to prevent melting the spacers. Be sure to connect the component leads to the proper RF pickup element.

( ) Connect a 100 Ω (brown-black-brown) resistor from #1 on the RF pickup element (S-1) to solder lug R (S-1). Connect the resistor lead at the very end of the RF pickup element. Position the resistor as shown.

CAUTION: When soldering the leads of the small silicon and crystal diodes, grip the lead between the connection and the body of the diode with a pair of long-nose pliers. This will protect the diodes from heat damage. By placing a rubber band around the handles of the pliers and clipping the pliers onto the diode lead, you will have both hands free for soldering.

( ) Cut both leads of a crystal diode (brown-white-brown) to 1/2". Connect the cathode (color band end) lead to lug 1 of terminal strip Q (S-3) and the other lead at #2 of the RF pickup element (S-1). Be sure the diode lead is positioned 5/8" from the end of the RF pickup element.

( ) Connect a 100 Ω (brown-black-brown) resistor from #4 of the RF pickup element (S-1) to the solder lug M (S-1). Connect the resistor lead at the very end of the RF pickup element. Position the resistor as shown.

( ) Cut both leads of a crystal diode (brown-white-brown) to 5/8". Connect the cathode (color band end) lead to lug 3 of terminal strip N (S-3) and the other lead at #3 of the RF pickup element (S-1). Be sure the diode lead is positioned 5/8" from the end of the RF pickup element.

( ) Connect a 465 Ω 15 watt resistor from lug 5 of terminal strip Q (S-2) to the lug of terminal strip V (S-2).

( ) Connect a 2000 Ω 7 watt resistor from lug 2 of terminal strip N (S-6) to lug 3 of relay L (S-2). Position the body of the resistor down against the chassis.

( ) Referring to Detail 8C, install the angle brackets, using 6-32 x 3/8" flat head hardware.

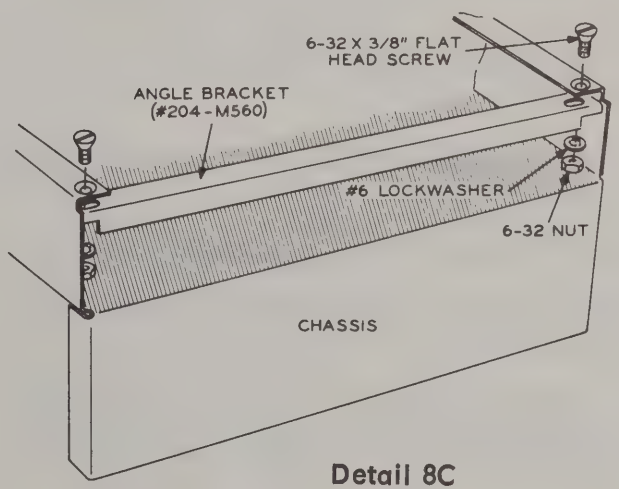

Detail 8C

( ) Remove the protective backing from a DANGER label and press it firmly in place on the underside of the chassis as shown.

This completes the wiring under the chassis. Check to see that all connections are soldered. Shake out any wire clippings and solder splashes.

WIRING-CHASSIS TOP

Refer to Pictorial 9 for the following steps.

Connect the power transformer leads to the circuit board as follows:

( ) Red to RED (S-1).

( ) Red-yellow to RED-YEL (S-1).

Connect the wires extending from hole H of the circuit board as follows:

( ) Short gray coming from the cable assembly to hole D of the circuit board (S-1).

( ) Yellow coming from switch B to hole C of the circuit board (S-1).

NOTE: The circuit breakers will be mounted after they are wired.

( ) Either large black coming from the cable assembly to lug 1 of a circuit breaker (S-1).

( ) Other large black to lug 2 of this circuit breaker (S-1).

( ) Either large red coming from the cable assembly to lug 1 of the other circuit breaker (S-1).

( ) Other large red to lug 2 of this circuit breaker (S-1).

Refer to Detail 9A for the following steps.

( ) Remove the round nut from both circuit breakers.

( ) Adjust the hex nut so it is 3/16" from the end of the threaded bushing on each circuit breaker.

( ) Install the circuit breaker with the black wires connected to it, at AM on the circuit breaker mounting bracket. Use the round nut removed from the circuit breaker. Be sure the wide space is between the circuit breaker lug and the bracket.

( ) In a like manner, install the circuit breaker with the red wires connected to it at AL of the circuit breaker bracket. Again position the wide space between the lug and bracket.

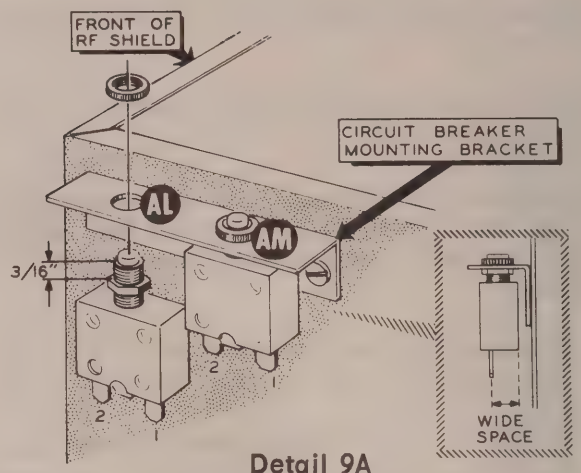

Detail 9A

( ) Fit the solder lug on the end of the 10 and 15 meter final coil on the bolts at #1 of the variable capacitor G. This coil will be secured later.

( ) Locate the 100 $\mu\mu$f tubular capacitor and mount a #6 solder lug with a 6-32 x 3/16" screw to one end of this capacitor as shown in Detail 9B.

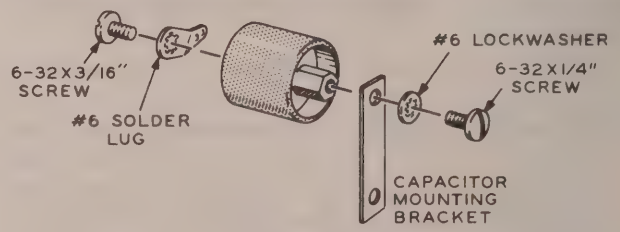

Detail 9B

( ) Now mount this capacitor to the capacitor mounting bracket, using a 6-32 x 1/4" screw and a #6 lockwasher as shown in Detail 9B.

( ) Place the capacitor mounting bracket on the bolt at #1 of variable capacitor G. Secure it and the final coil mounted previously with a #6 lockwasher and a 6-32 nut.

( ) Connect the end of the wire coming from lugs A5 of switch AK to the lug of the 100 $\mu\mu$f tubular capacitor mounted on lug 1 of variable capacitor G (S-1).

( ) Thread a 1000 $\mu\mu$f tubular ceramic capacitor onto the bolt at #2 of variable capacitor G.

( ) Install a #6 solder lug at AP on the tubular ceramic capacitor, using a 6-32 x 3/16" screw. Position the solder lug as shown.

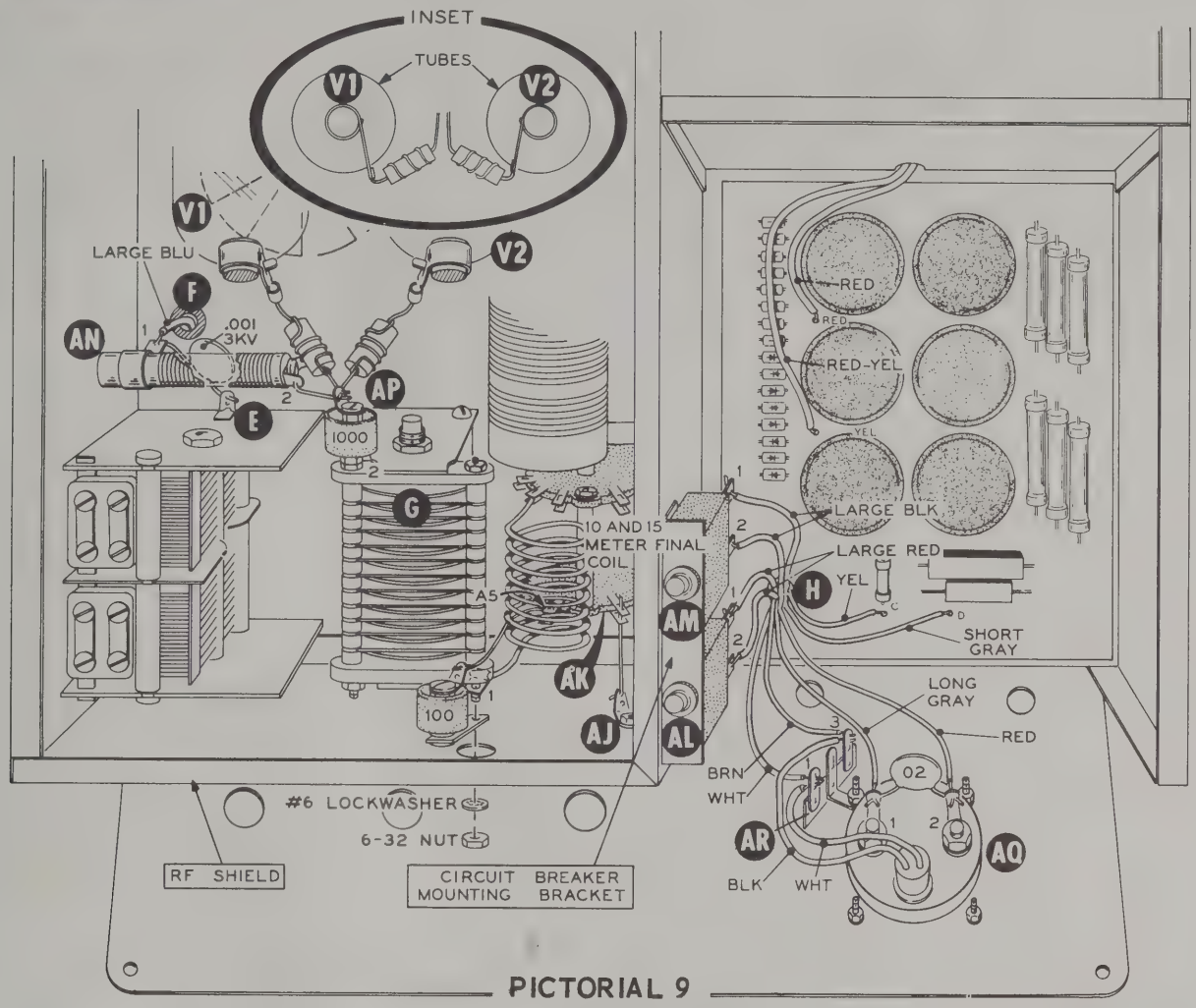

PICTORIAL 9

( ) Cut both leads of a .001 μfd 3 KV disc capacitor to 1/2" in length.

( ) Connect one lead of this capacitor to solder lug E (S-1). The other lead will be connected later.

( ) Referring to Detail 9C, install the 50 μh RF choke (#45-61) at AN, using a 6-32 x 3/8" screw and a 1/2" fiber flat washer.

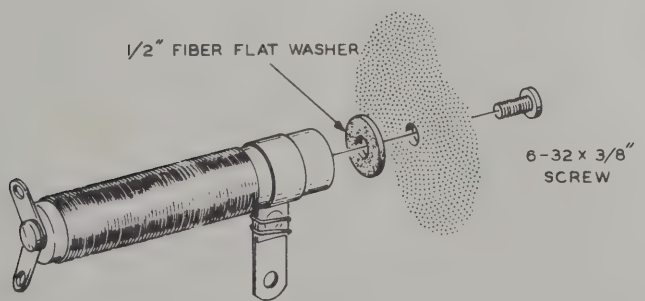

Detail 9C

( ) Connect the lead of the .001 μfd disc capacitor coming from solder lug E to lug 1 of RF choke AN (NS).

( ) Connect the end of the large blue wire coming from grommet F to lug 1 of RF choke AN (S-2).

( ) Connect a 1-1/4" bare wire from lug 2 of RF choke AN (S-1) to solder lug AP (NS).

( ) Referring to Detail 9D, prepare two anode clip and RF choke combinations. Use anode clips and parasitic RF chokes (#45-53) as shown.

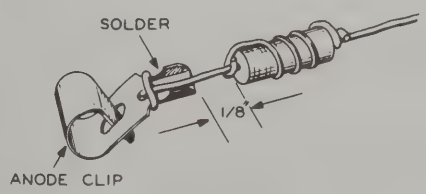

Detail 9D

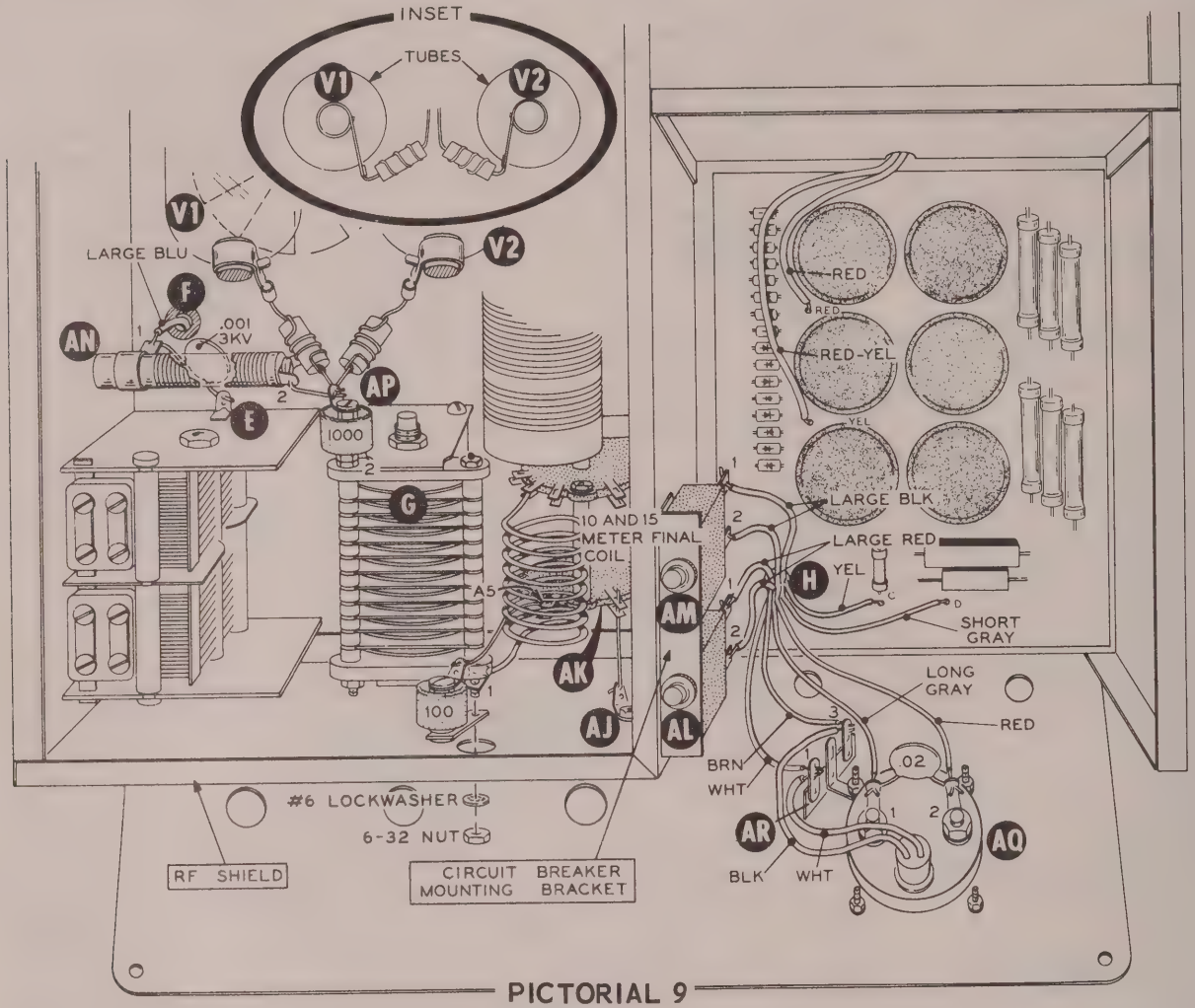

PICTORIAL 9
(Repeat)

( ) Install the 572-B or T160-L tubes in tube sockets V1 and V2.

( ) Install an anode clip and RF choke combination on the cap of each tube as shown in the inset drawing in Pictorial 9.

( ) Connect the free choke lead of one of these combinations to solder lug AP (NS). Position the combination as shown.

( ) Connect the free choke lead of the other combination to solder lug AP (S-3). Position the combination as shown.

( ) Referring to Detail 9E, install the meter at AQ on the front panel with a 3-lug terminal strip at AR. Use a #6 lockwasher plus the lockwashers and nuts supplied with the meter. Bend the lugs of the meter upward, as shown.

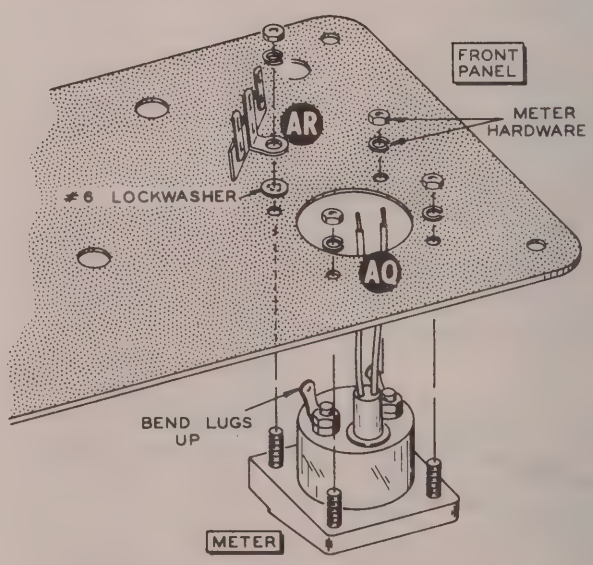

Detail 9E

( ) Remove the shorting clip from between the meter lugs.

( ) Connect a .02 μfd disc capacitor between lugs 1 (NS) and 2 (NS) of meter AQ.

( ) Remove the control nuts from B, C, and AK.

( ) Position the front panel in front of the chassis.

Connect the wires extending from hole H of the circuit board as follows:

( ) Red to lug 2 of meter AQ (S-2).

( ) Long gray to lug 1 of meter AQ (S-2).

( ) White to lug 1 of terminal strip AR (NS).

( ) Brown to lug 3 of terminal strip AR (NS).

( ) Connect the white lead from the meter pilot lamp socket to lug 1 of terminal strip AR (S-2).

( ) Connect the black lead from the meter pilot lamp socket to lug 3 of terminal strip AR (S-2).

( ) Referring to Detail 9F, install the front panel on the chassis, using a control lockwasher, control flat washer, and a control nut at AK, with control flat washers and control nuts at B and C. Do not tighten the nuts at this time.

( ) Secure the four corners of the front panel to the chassis, using 6-32 x 3/8" phillips head hardware. Do not tighten at this time.

( ) Now center the front panel so the rocker switch works freely. Tighten the three control nuts and the hardware at the corners of the front panel.

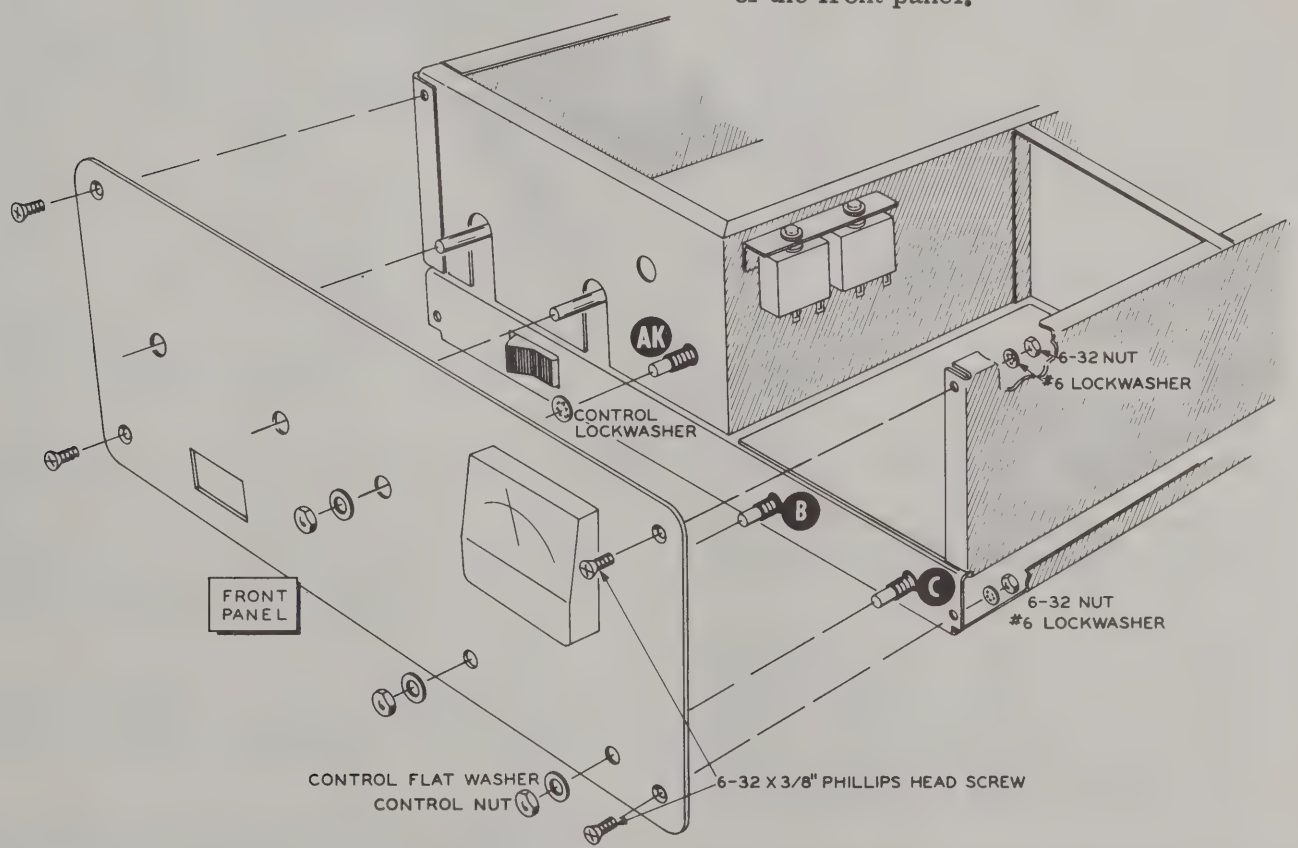

Detail 9F

FINAL WIRING

Refer to Pictorial 10 for the following step.

Connect the wires coming from grommet P as follows:

( ) Shielded cable inner lead to lug C12 of switch AK (S-1). The shield is not used at this end of the cable.

( ) Shorter green power transformer lead to lug 3 of terminal strip M (NS).

( ) Longer green power transformer lead to lug 1 of terminal strip M (NS).

( ) Brown to lug 1 of terminal strip M (NS).

( ) White to lug 3 of terminal strip M (NS).

( ) Green to lug 6 of terminal strip AB (NS).

( ) Violet to lug 5 of terminal strip AB (NS).

( ) Gray to lug 1 of terminal strip AB (NS).

( ) Connect a 33 Ω (orange-orange-black) 1 watt resistor from lug 3 of tube socket V2 (NS) to lug 3 of terminal strip AB (NS).

( ) Connect a 33 Ω (orange-orange-black) 1 watt resistor from lug 3 of tube socket V1 (NS) to lug 3 of terminal strip AB (NS).

( ) Connect a 5 μμf disc capacitor from lug 2 of terminal strip AB (NS) to the lead of the resistor going to lug 3 of tube socket V1 (S-1). Position the capacitor as shown.

( ) Connect a 3300 Ω (orange-orange-red) 1 watt resistor between lugs 6 (NS) and 3 (NS) of terminal strip AB.

( ) Connect the 28 μh RF choke (#45-18) between lugs 3 (S-4) and 6 (NS) of terminal strip AB.

( ) Connect a .02 μfd disc capacitor between lugs 1 (NS) and 2 (NS) of terminal strip M.

( ) Connect a .02 μfd disc capacitor between lugs 2 (S-2) and 3 (NS) of terminal strip M.

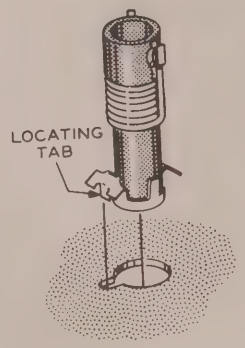

Detail 10A

( ) Connect a 3" bare wire from lug C6 of switch AK (S-1) to lug 2 of tube socket V2 (NS). Use small sleeving. Flatten the end of the wire that connects to the switch lug.

( ) Referring to Detail 10A, install the (#40-728) coil at CA. Press on the coil until the retaining clips snap into place.

( ) In a like manner, install the (#40-727) coil at CB.

( ) Install the (#40-593) coil at CC.

( ) Install the (#40-592) coil at CD.

( ) Install the (#40-591) coil at CE.

( ) Connect a 68 μμf mica capacitor from lug 2 of coil CA (NS) to lug 1 of solder lug AE (S-1).

( ) Connect a 75 μμf mica capacitor from lug 2 of coil CB (NS) to lug 2 of solder lug AE (NS).

( ) Connect a 200 μμf mica capacitor from lug 2 of coil CC (NS) to lug 1 of solder lug AF (NS).

( ) Connect a 310 μμf mica capacitor from lug 2 of coil CD (NS) to lug 2 of solder lug AF (NS).

( ) Connect a 470 μμf silver mica capacitor from lug 2 of coil CE (NS) to lug 2 of solder lug AF (S-2).

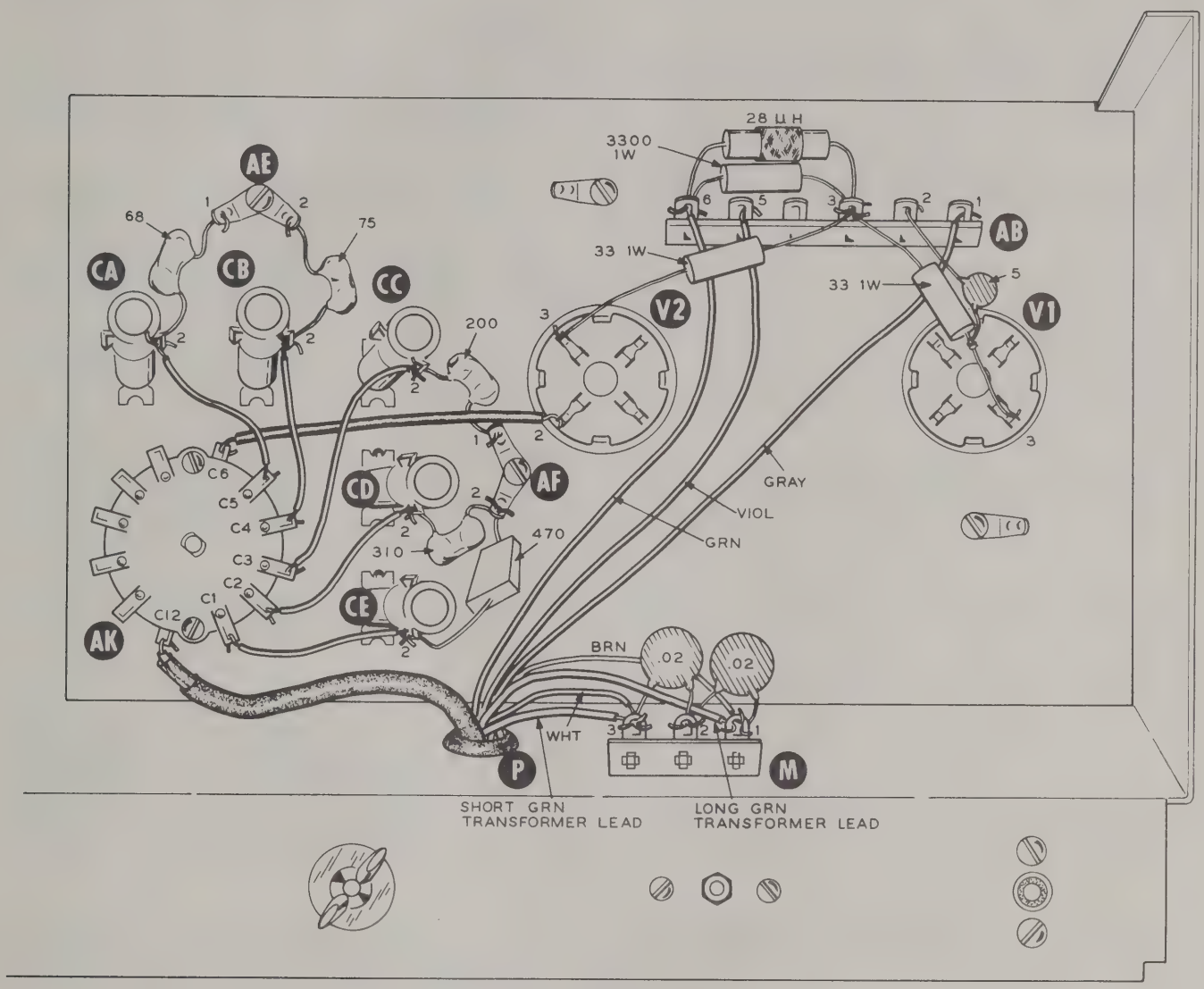

PICTORIAL 10

NOTE: When connecting wires to the remaining lugs of switch AK be sure to solder both lugs at each location.

( ) Connect a 1-1/4" gray wire from lug 2 of coil CA (S-2) to lugs C5 of switch AK (S-1).

( ) Connect a 1-1/4" gray wire from lug 2 of coil CB (S-2) to lugs C4 of switch AK (S-1).

( ) Connect a 2" gray wire from lug 2 of coil CC (S-2) to lugs C3 of switch AK (S-1).

( ) Connect a 1-1/4" gray wire from lug 2 of coil CD (S-2) to lugs C2 of switch AK (S-1).

( ) Connect a 1-1/4" gray wire from lug 2 of coil CE (S-2) to lugs C1 of switch AK (S-1).

Refer to Pictorial 11 for the following steps.

( ) Connect a 360 μμf mica capacitor from lug 1 of coil CC (NS) to lug 2 of solder lug AE (S-2).

( ) Connect a 510 μμf silver mica capacitor from lug 1 of coil CD (NS) to lug 1 of solder lug AF (S-2).

( ) Connect a 2-1/4" gray wire from lug 1 of coil CE (S-1) to lugs C7 of switch AK (S-1).

( ) Connect a 2" gray wire from lug 1 of coil CD (S-2) to lugs C8 of switch AK (S-1).

( ) Connect a 2-3/4" gray wire from lug 1 of coil CC (S-2) to lugs C9 of switch AK (S-1).

( ) Connect a 2" gray wire from lug 1 of coil CB (S-1) to lugs C10 of switch AK (S-1).

( ) Connect a 2-1/4" gray wire from lug 1 of coil CA (S-1) to lugs C11 of switch AK (S-1).

( ) Connect a 200 μμf mica capacitor from lug 3 of tube socket V2 (S-2) to solder lug AD (S-1).

( ) Connect a .02 μfd disc capacitor between lugs 4 (NS) and 5 (NS) of terminal strip AB.

( ) Connect a .02 μfd disc capacitor between lugs 4 (NS) and 6 (S-4) of terminal strip AB.

( ) Connect a .02 μfd disc capacitor between lugs 4 (NS) and 1 (NS) of terminal strip AB. Use sleeving on both leads.

( ) Connect an 18 μμf disc capacitor between lugs 4 (S-4) and 2 (NS) of terminal strip AB.

( ) Connect a 2-1/4" bare wire from lug 4 of tube socket V2 (NS) to lug 1 of tube socket V1 (NS).

( ) Connect a 2-1/4" bare wire from lug 1 of tube socket V2 (NS) to lug 4 of tube socket V1 (NS).

( ) Connect a .02 μfd disc capacitor between lugs 1 (NS) and 4 (S-2) of tube socket V2.

( ) Connect a .02 μfd disc capacitor between lugs 1 (S-3) and 2 (S-2) of tube socket V2.

( ) Connect a 4700 Ω (yellow-violet-red) resistor between lugs 2 (NS) and 5 (S-3) of terminal strip AB.

( ) Connect the cathode (band end) lead of an IN458 silicon diode (yellow-green-gray) to lug 1 (S-3) and the other lead to lug 2 (S-4) of terminal strip AB.

( ) Connect a 200 μμf mica capacitor from lug 3 of tube socket V1 (S-2) to solder lug AC (S-1).

NOTE: In the following steps, bend the leads of the 10 μh RF choke (#45-60) to reach their proper connecting points, then cut off any excess lead lengths. Bend the leads very carefully so as not to damage the coil form. Also, do not allow the choke to extend over the rear edge of the chassis.

( ) At one end of the coil, connect lead 1 to lug 3 (S-4) and lead 2 to lug 1 (S-4) of terminal strip M.

( ) At the other end of the coil, connect lead 4 to lug 4 (S-2) and lead 3 to lug 1 (S-2) of tube socket V1.

This completes the wiring. Carefully check to see that no wiring errors were made and that all connections are soldered. Shake out any wire clippings and solder splashes.

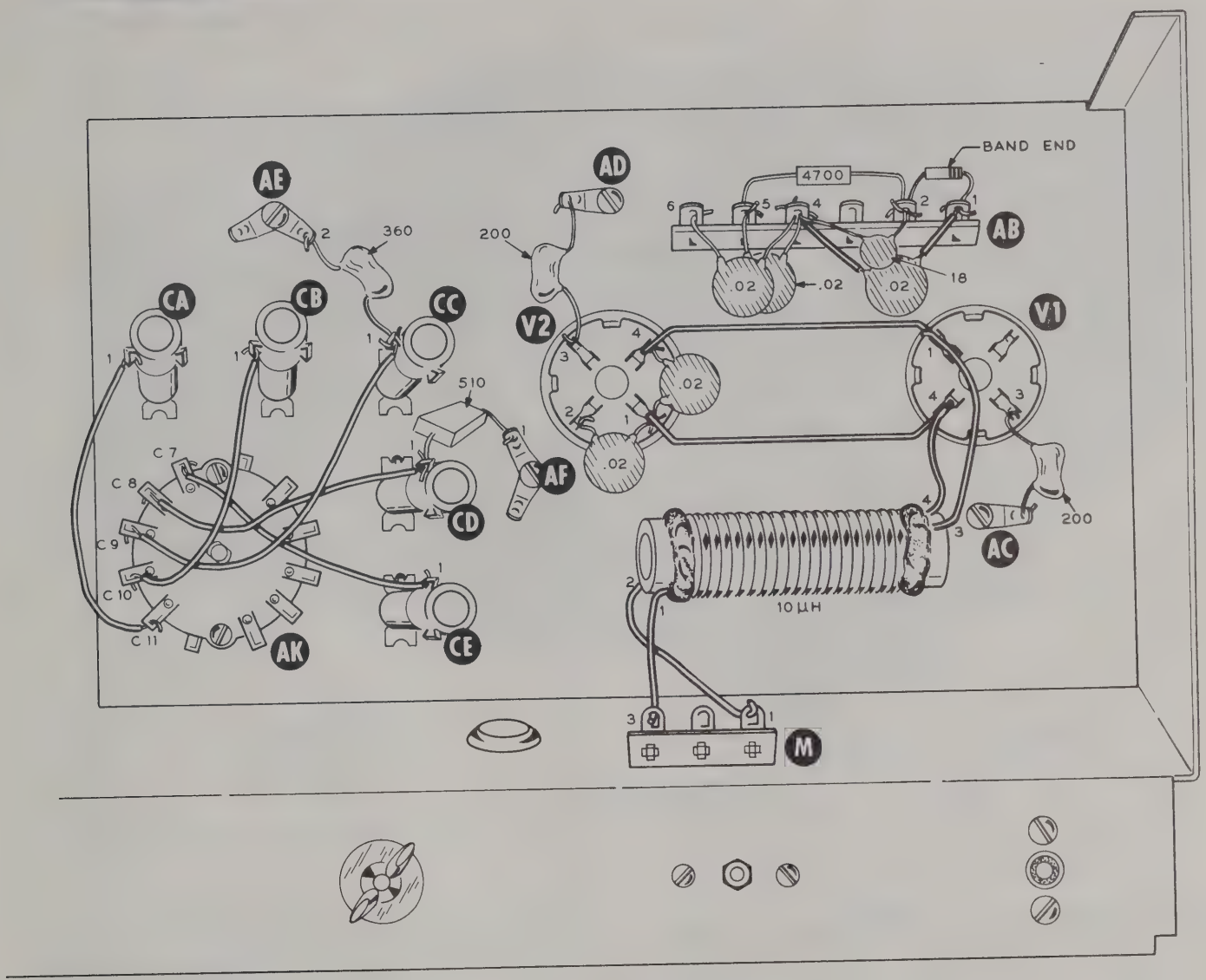

PICTORIAL 11

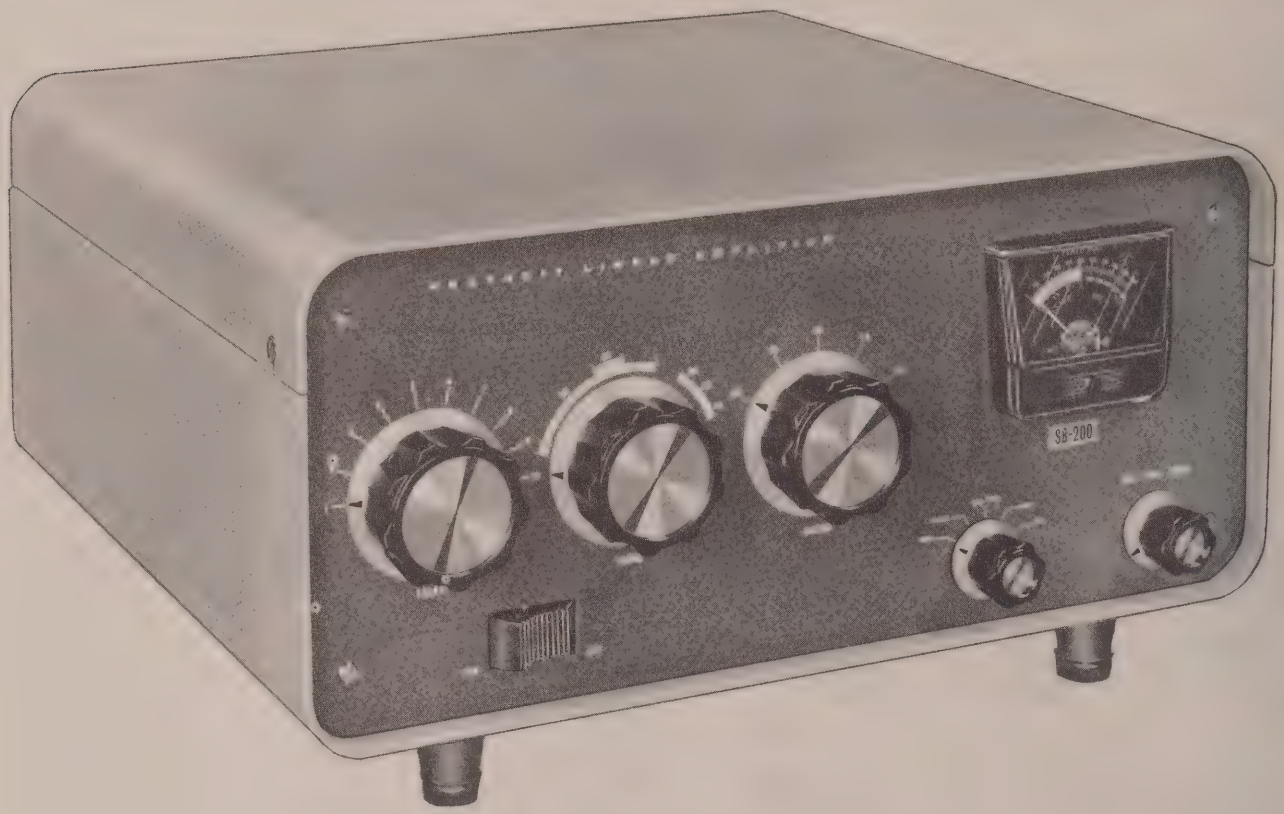

PICTORIAL 12

Refer to Pictorial 12 for the following steps.

( ) Rotate all capacitor, switch, and control shafts fully counterclockwise, except the TUNE capacitor which should be rotated until the plates are fully meshed (closed).

( ) Install small knobs at the Meter and REL PWR SENS locations, using 8-32 x 1/4" setscrews. Position the pointers as shown.

( ) Install the large knobs at the LOAD, TUNE, and BAND locations, using 8-32 x 1/4" setscrews. Position the pointers as shown.

( ) Remove the protective backing from the nameplate and press it firmly in place directly under the meter. The nameplate should cover the printed outline at the nameplate location.

( ) Referring to Pictorial 13, prepare a 4 foot long cable to reach between the Linear Amplifier and your exciter. Use the large shielded cable (RG-58A/U) and a phono plug connected at one end. It will be necessary to install the proper type connector to the other end of this cable to match the antenna connector of your exciter.

NOTE: If it is necessary to install a coaxial connector to any of the cables, refer to Pictorial 14, for proper installation.

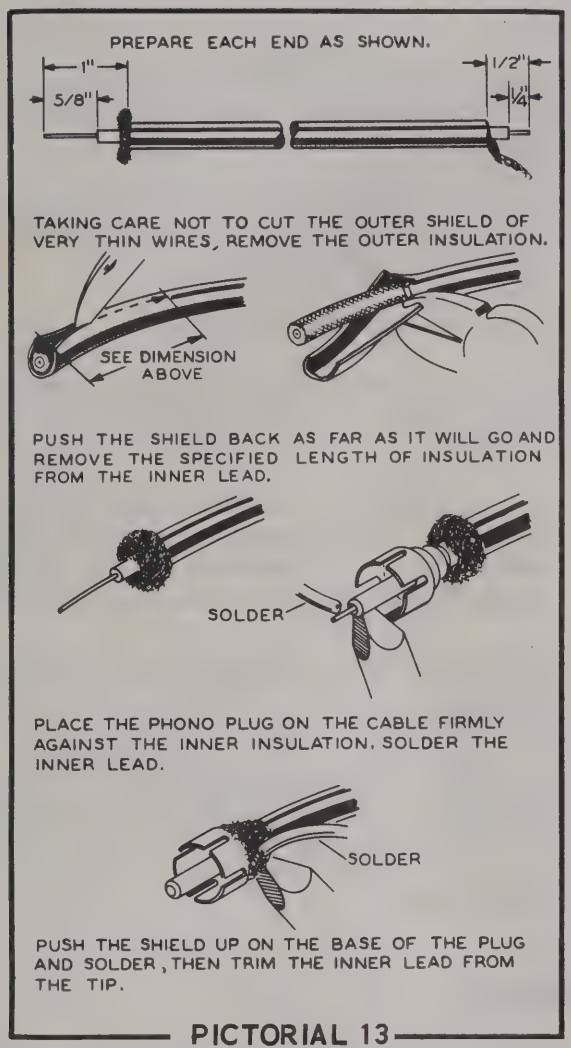
PREPARE EACH END AS SHOWN.
1"
5/8"
1/2"
1/4
TAKING CARE NOT TO CUT THE OUTER SHIELD OF VERY THIN WIRES, REMOVE THE OUTER INSULATION.
SEE DIMENSION ABOVE
PUSH THE SHIELD BACK AS FAR AS IT WILL GO AND REMOVE THE SPECIFIED LENGTH OF INSULATION FROM THE INNER LEAD.
SOLDER
PLACE THE PHONO PLUG ON THE CABLE FIRMLY AGAINST THE INNER INSULATION. SOLDER THE INNER LEAD.
SOLDER
PUSH THE SHIELD UP ON THE BASE OF THE PLUG AND SOLDER, THEN TRIM THE INNER LEAD FROM THE TIP.

PICTORIAL 13

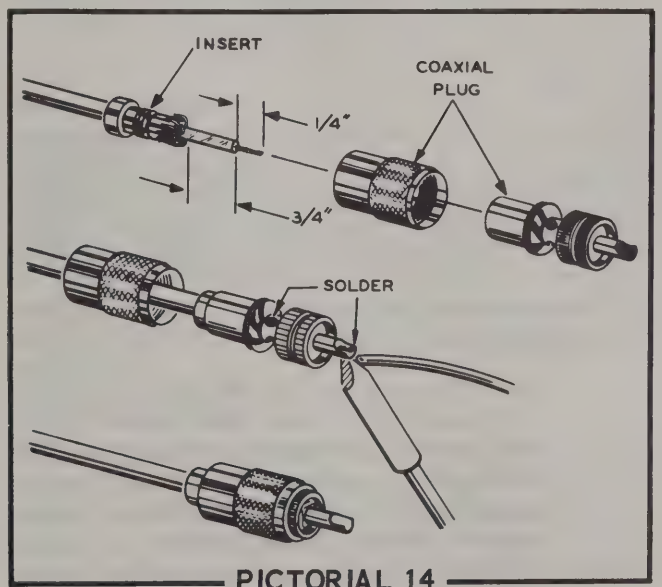

PICTORIAL 14

( ) Referring to Pictorial 15, prepare two 4 foot long cables to reach between the Linear Amplifier and the exciter. Use the small shielded cable with a phono plug connected at one end. It will be necessary to install the proper type of connector to the other ends of these cables to connect to the exciter. One of these cables connects between the ANT RELAY jack of the Linear Amplifier and the LINEAR RELAY jack of the exciter. The other cable connects between the ALC jack of the Linear Amplifier and the ALC input of the exciter, if your exciter has provisions for ALC input from a Linear Amplifier.

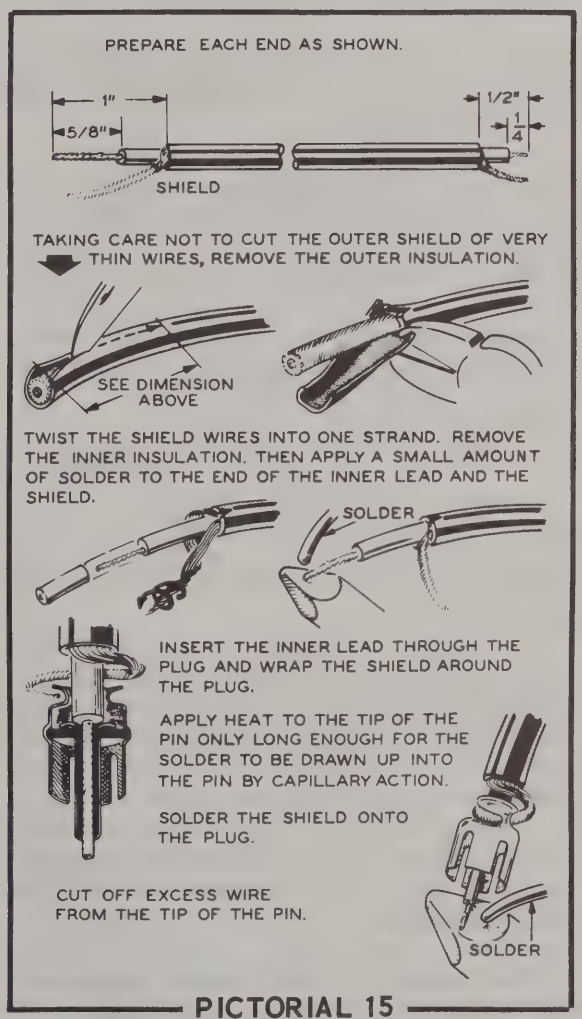
PREPARE EACH END AS SHOWN.
1"
5/8"
1/2"
1/4
SHIELD
TAKING CARE NOT TO CUT THE OUTER SHIELD OF VERY THIN WIRES, REMOVE THE OUTER INSULATION.
SEE DIMENSION ABOVE
TWIST THE SHIELD WIRES INTO ONE STRAND. REMOVE THE INNER INSULATION. THEN APPLY A SMALL AMOUNT OF SOLDER TO THE END OF THE INNER LEAD AND THE SHIELD.
SOLDER
INSERT THE INNER LEAD THROUGH THE PLUG AND WRAP THE SHIELD AROUND THE PLUG.
APPLY HEAT TO THE TIP OF THE PIN ONLY LONG ENOUGH FOR THE SOLDER TO BE DRAWN UP INTO THE PIN BY CAPILLARY ACTION.
SOLDER THE SHIELD ONTO THE PLUG.
CUT OFF EXCESS WIRE FROM THE TIP OF THE PIN.
SOLDER

PICTORIAL 15

INITIAL TEST

The input coils are factory adjusted and do not require any further alignment.

RESISTANCE CHECK

( ) The resistance between either anode clip and the chassis should measure approximately 180 KΩ after the meter stabilizes.

( ) The resistance between lug 3 of either tube socket V1 or V2 and the chassis should measure between 5000 Ω and 15,000 Ω.

If any difficulty is encountered in obtaining either of these resistance readings, refer to the In Case Of Difficulty section of the manual on Page 50.

CAUTION: LETHAL VOLTAGES ARE PRESENT IN THIS UNIT. USE EXTREME CARE WHEN MAKING ANY TESTS.

If at any time during the testing and operation the Linear Amplifier does not perform as described, unplug the Linear Amplifier line cord and refer to the In Case Of Difficulty section of the manual.

( ) Rotate all knobs to their fully counter-clockwise positions, except the TUNE knob which should be at its 9 o'clock position. Place the OFF-ON switch in the OFF position.

( ) Plug the line cord plug into the power source for which the unit is wired, either 120 volts or 240 volts AC.

( ) Push the OFF-ON switch to ON.

( ) Check to see that the tube filaments and meter pilot lamp light, and that the fan operates.

( ) Rotate the meter switch through all of its positions. There should not be a meter indication in any position, except for HV which should read approximately 2400 volts.

( ) Push the OFF-ON switch to OFF and unplug the line cord.

( ) To insure the discharge of the filter capacitors and reduce the shock hazard, short the anode clip of one of the tubes to the chassis, using a screwdriver with an insulated handle.

FINAL ASSEMBLY

Refer to Pictorial 16 for the following steps.

( ) Install the top plate, using #6 x 3/8" sheet metal screws.

( ) Remove the protective backing from a DANGER label and press it firmly in place on the top plate, as shown.

( ) Slide the chassis into the cabinet.

( ) Install rubber feet at the rear of the cabinet, using 6-32 x 3/4" screws and 3/8" flat steel washers.

( ) Install rubber feet and tapered spacers at the front of the cabinet, using 6-32 x 1-1/2" screws and 3/8" flat steel washers. NOTE: If you wish to have the Linear Amplifier set flat, extra 6-32 x 3/4" screws are supplied for mounting feet at the front only.

( ) Install the 8-32 x 1/4" screws in the holes at each side of the cabinet frame. These screws need only be loosened slightly to permit the cover to be opened.

NOTE: The blue and white identification label shows the Model Number and Production Series Number of your kit. Refer to these numbers in any communications with the Heath Company; this assures you that you will receive the most complete and up-to-date information in return.

( ) Install the identification label in the following manner:

1. Select a location for the label where it can easily be seen when needed, but will not show when the unit is in operation. This location might be on the rear panel or the top of the chassis, or on the rear or bottom of the cabinet.
2. Carefully peel away the backing paper. Then press the label into position.

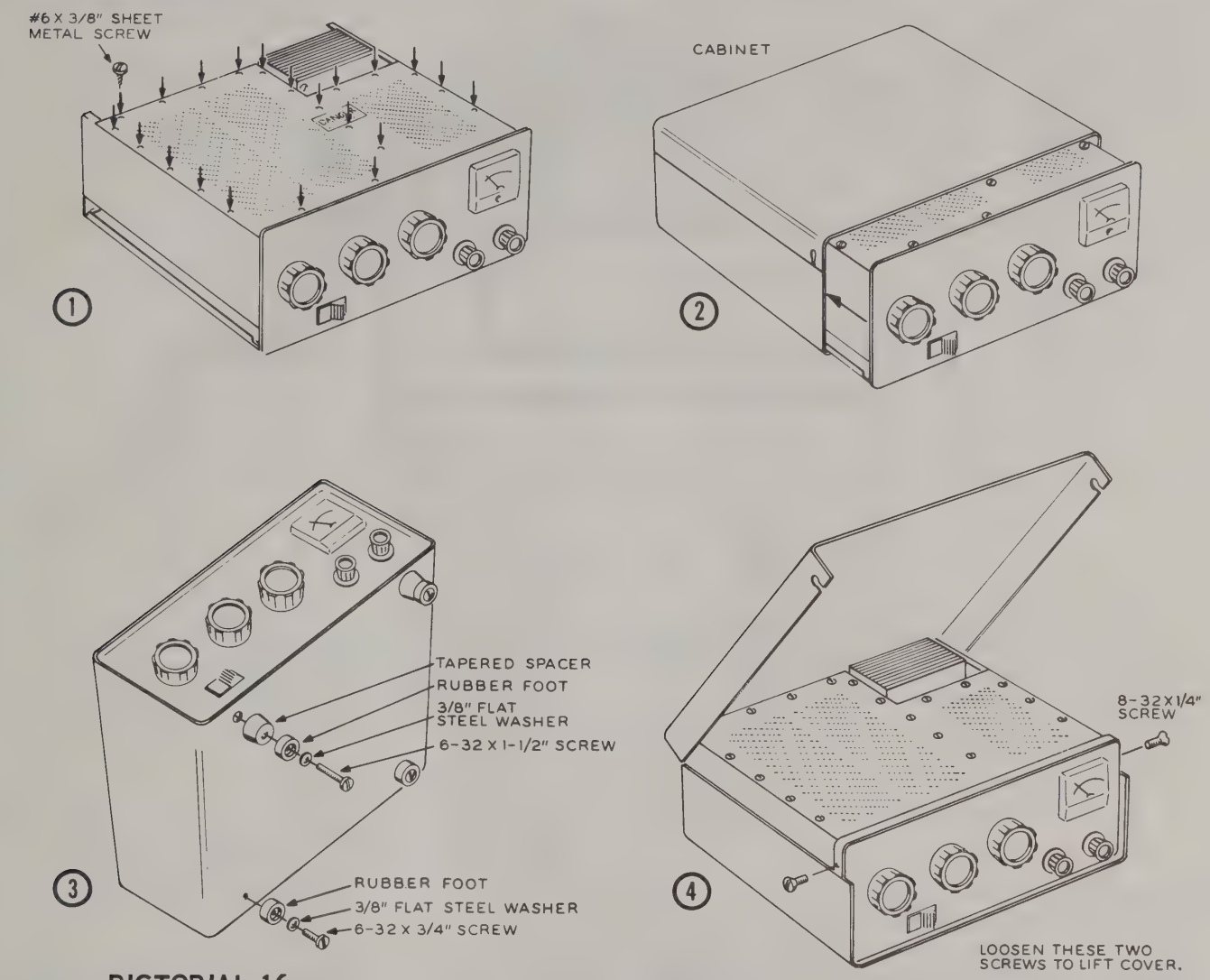

PICTORIAL 16

INSTALLATION

LOCATION

Although the Linear Amplifier has a built-in fan for cooling purposes, avoid excessively warm locations such as those near radiators and heating vents. The unit should be placed in a location that provides adequate space around it, permitting free air circulation through the cabinet openings.

POWER SOURCE

The Linear Amplifier is designed to operate from either a 120 volt or 240 volt AC, 60 cps power source, depending on the jumper installation on terminal strip S. The AC power outlet used should be properly fused and fed with not smaller than #14 wire.

The plug on the power cord for this kit is for standard 120 VAC outlets. For 240 VAC operation in the U.S.A. cut off this plug and replace it with a permanent plug that matches your 240 VAC receptacle. Be sure your power connection conforms with section 210-21 (b) of the National Electric Code, which reads in part:

> "Receptacles connected to circuits having different voltages, frequencies or types of current (AC or DC) on the same premises shall be of such design that attachment plugs used on such circuits are not interchangeable."

When you install a new plug, make sure it is connected according to your local electrical code. Keep in mind that the green line cord wire is connected to the amplifier chassis.

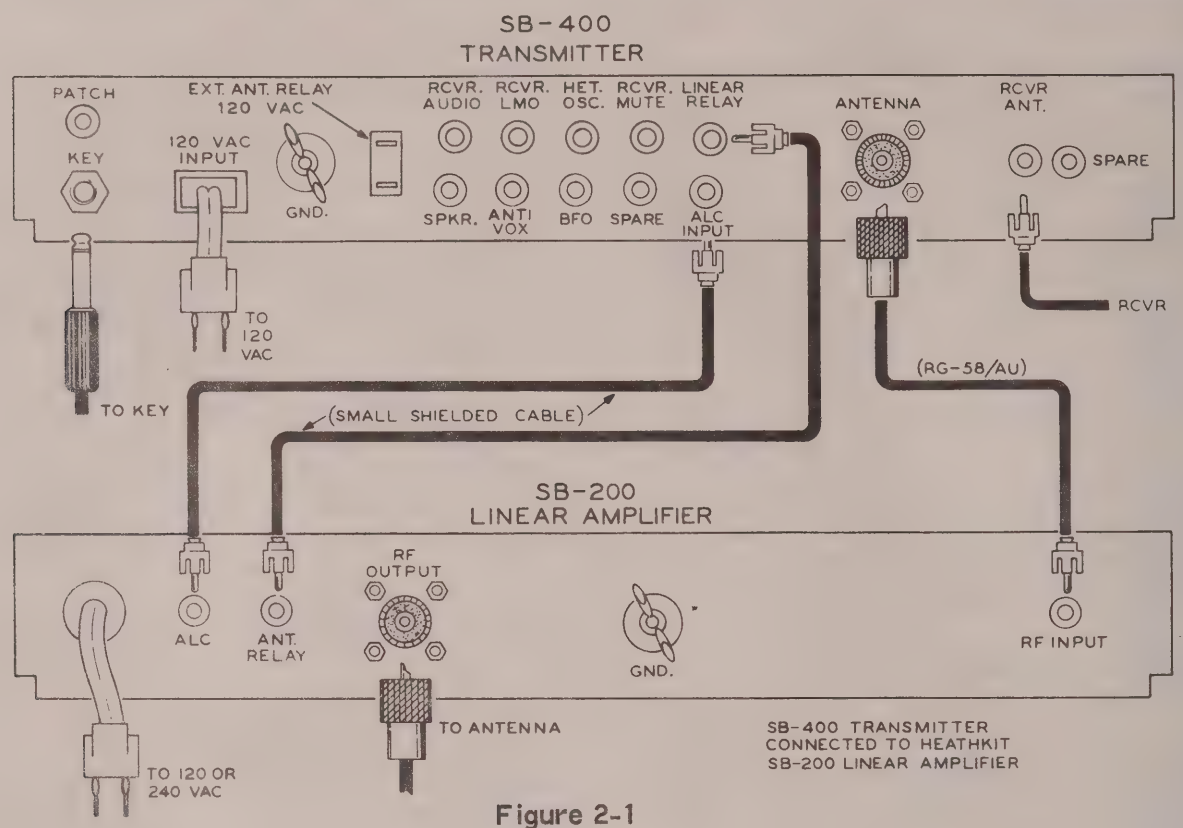

Figure 2-1

EXCITER

The Linear Amplifier can be driven by most commercial or home-built exciters with a power output of approximately 100 watts. The Heathkit SB-400 or SB-401 Transmitter or the SB-100 or SB-101 Transceiver is ideal for use with this Linear Amplifier.

Exciters in the 40 to 60 watt output class will not drive the Linear Amplifier to a full kilowatt, however, the Linear Amplifier will operate quite efficiently at lower power levels.

ANTENNA

The pi-network output is designed to work into a 50 to 75 Ω transmission line. Most commercial and home-built antennas are designed to be fed with 50 or 72 Ω coax. RG-8/U or RG-11/U coaxial cable is recommended for the transmission line, and every effort should be made to get the SWR of the antenna down to less than 2 to 1.

SWR MEASUREMENTS

( ) Connect the amplifier to the exciter and the antenna. Do not turn the Linear Amplifier ON, thus permitting the exciter to feed through the Linear Amplifier to the antenna.

( ) Place the Linear Amplifier Meter switch in the REL PWR position.

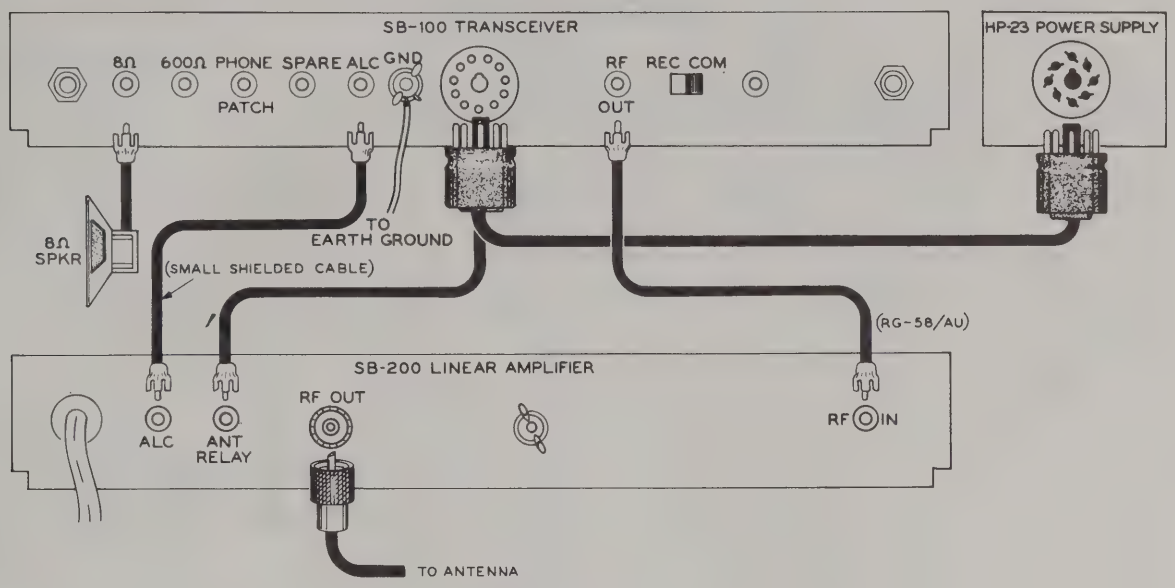

Figure 2-2

( ) Load the exciter to full output. The meter of the Linear Amplifier may be used for this purpose, as it will function in both the REL PWR and SWR positions without the Linear Amplifier being turned ON.

( ) Adjust the REL PWR SENS control of the Linear Amplifier for a SET (full-scale) indication on the meter.

( ) Turn the meter switch to SWR and read the standing wave ratio directly from the meter (1 to 3 scale).

NOTE: SWR checks can also be made with the Linear Amplifier operating at full power (1000 watts); however, due to the nonlinear characteristics of crystal diodes in the SWR circuit, the most accurate SWR readings are obtained at low power (70 to 100 watt) levels using only the exciter. If the exciter alone will not give full scale relative power readings, the Linear Amplifier may be used, however, limit the drive from the exciter to no more than necessary.

Figure 2-1 shows the Linear Amplifier connected to the Heathkit Model SB-400 Transmitter. Other transmitters or exciters would be connected to the Linear Amplifier in a similar manner.

The Heathkit Model SB-100 Transceiver can be connected to the Linear Amplifier as shown in Figure 2-2.

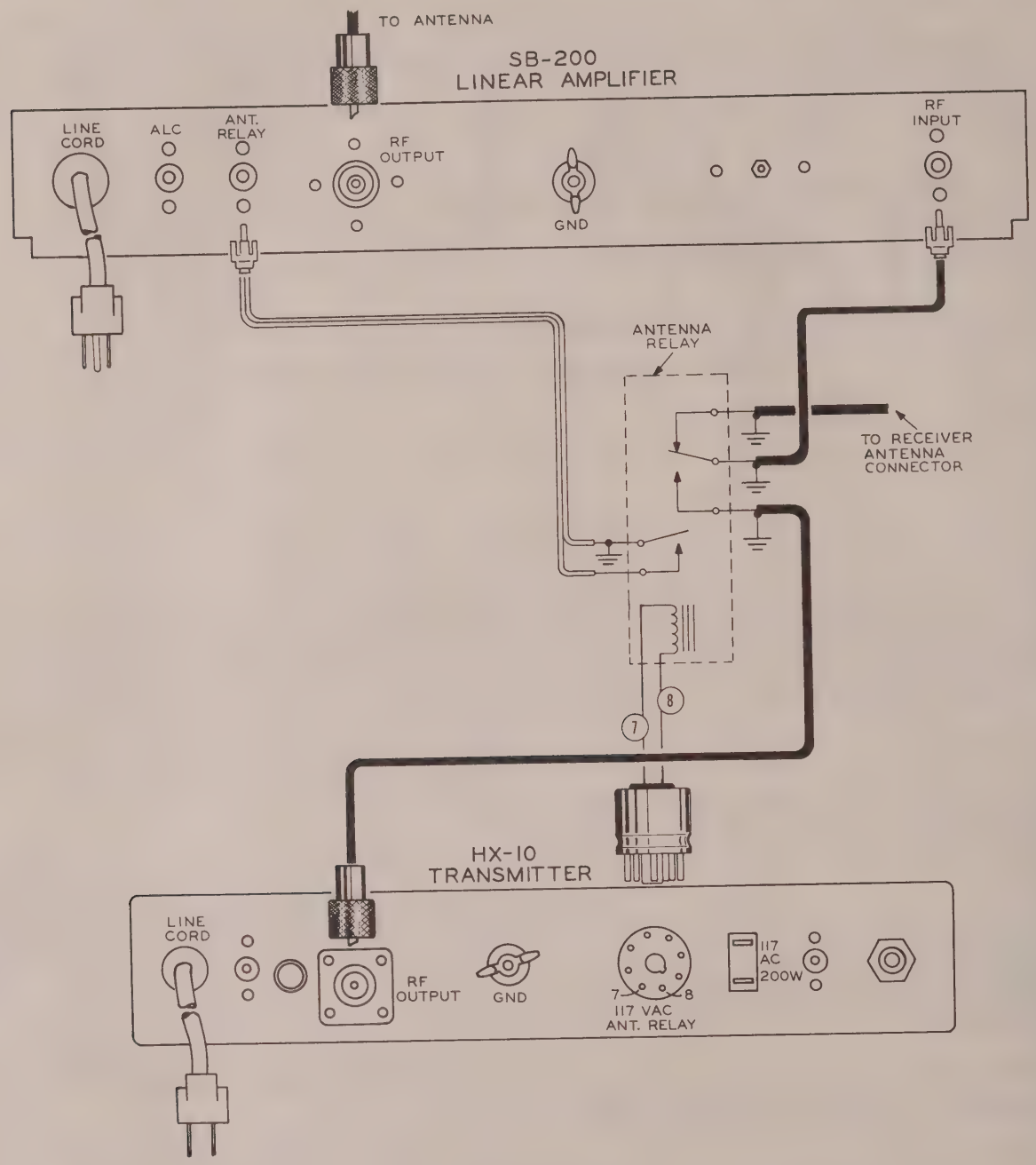

Figure 2-3

Observe in Figure 2-3 that an external antenna relay with extra contacts is necessary to obtain proper antenna switching, when connecting the Linear Amplifier to the Heathkit Model HX-10 Transmitter, and other transmitters not having a built-in antenna relay.

NOTE: The ANT RELAY jack of the Linear Amplifier must be grounded by the exciter to place the Linear Amplifier into operation. (See the Circuit Description.) This grounding is accomplished by the VOX relay or a transmit-receive switch in the exciter.

OPERATION

METER READINGS

Refer to Figure 2-4 and study the meter scale; note how it indicates for the various positions of the Meter switch.

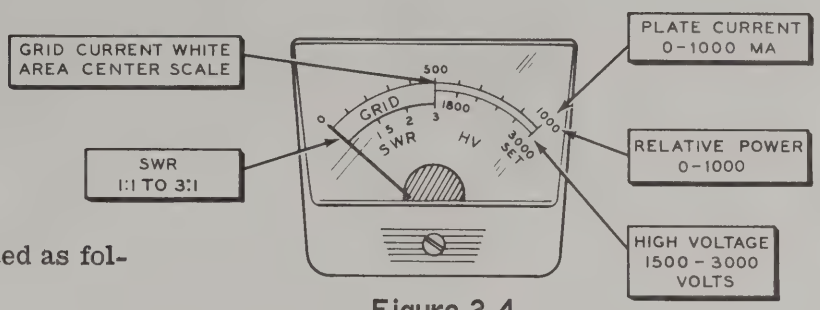

Figure 2-4

The meter scales should be interpreted as follows:

METER SWITCH POSITION	MEASURES	SCALE READING
GRID	Grid current	GRID (white area represents 0-100 ma)
PLATE	Plate current	0-1000 ma
REL PWR	Relative power output	0-1000
SWR	Standing wave ratio	1:1 to 3:1
HV	High voltage	1500-3000

OPERATING PROCEDURE

Make sure the Linear Amplifier is connected to your exciter properly.

( ) Set all switches and controls as follows:

SWITCH OR CONTROL	SWITCH OR CONTROL POSITION	COMMENTS
OFF-ON	OFF	Linear amplifier line cord connected to proper power source.
LOAD	4	Note desired position for antenna used and preset next time.
BAND	80 meters	Or desired band.
TUNE	80 meter segment	Or desired band segment.
METER	REL PWR	
REL PWR SENS	FULLY CLOCKWISE	Adjust to keep meter pointer on scale.

( ) Adjust the exciter for full CW output at the desired frequency. NOTE: With the Linear Amplifier turned OFF, the exciter output is fed through the Linear Amplifier to the RF OUTPUT jack. Also, the REL PWR and SWR functions of the Meter may be used to aid in tuning the exciter.

( ) Reduce the drive level of the exciter to a minimum.

( ) Place the Meter switch of the Linear Amplifier in the PLATE position and push the OFF-ON switch to ON. With no driver output from the exciter, the Linear Amplifier meter should show idling plate current of approximately 90 ma.

( ) Advance the drive level of the exciter for a 200 ma plate current indication on the meter of the Linear Amplifier.

( ) Quickly switch the Linear Amplifier Meter switch to REL PWR. If necessary, reduce the REL PWR SENS control setting to keep the meter pointer within the scale.

( ) Adjust the TUNE and LOAD controls for a maximum REL PWR meter indication.

( ) Increase the drive level from the exciter to full output.

( ) Again, adjust the TUNE and LOAD controls for a maximum REL PWR meter indication.

( ) Check the GRID and PLATE meter readings. If the grid reading is greater than midscale, reduce the drive level of the exciter to bring grid current within the GRID range of the meter. If the plate current reading is higher than 500 ma, reduce loading by turning the LOAD control counterclockwise.

This procedure of tuning the Linear Amplifier should take only a few seconds, after you go through it a few times. Note the LOAD control position so it can be preset next time a particular band is used.

The Linear Amplifier is now loaded for operation at maximum input power. If an oscilloscope is being used for monitoring, a display similar to that shown in Figure 2-5 should be obtained.

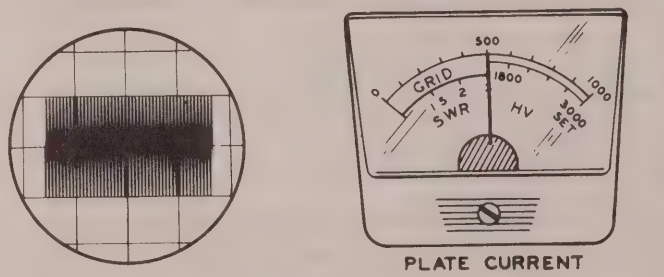

Oscilloscope pattern and plate meter reading resulting from carrier or "single tone" modulation. The meter indicates maximum or CW power input.

Figure 2-5

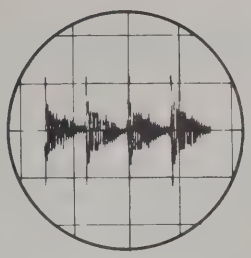

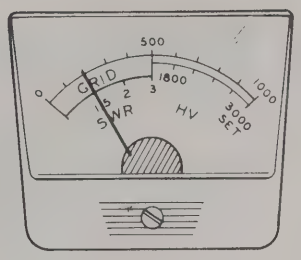

PLATE CURRENT

Oscilloscope pattern and plate meter reading resulting from voice modulation. Notice the peaks on the oscilloscope pattern. They are sharp, indicating a clean signal, and they will attain a height slightly greater than the "single tone" pattern of Figure 2-5, indicating maximum power input. NOTE: Plate current peak reading is approximately 1/2 or less of maximum "single tone" reading due to meter inertia and voice characteristics.

Figure 2-6

Turn the exciter to standby to remove drive from the Linear Amplifier.

The Linear Amplifier is now ready for SSB or CW transmission. An example of a proper oscilloscope pattern is shown in Figure 2-6. Note that there are sharp distinct peaks. The number of patterns or "christmas trees" will depend on the individual voice and the scope sweep speed. Set the scope for about a 30 cps sweep.

Note that the meter reading on voice peaks will not be high; however, the height of the oscilloscope pattern is slightly greater than that shown in Figure 2-5. This increase in peak power is due to dynamic characteristics of the power supply and allows the Linear Amplifier to develop approximately 20% greater peak envelope power for a given level of CW input. The meter will indicate only one-half or less of the single tone level, depending on the individual's voice, before "flat topping" occurs.

Figure 2-7 shows the same voice pattern but with extreme "flat topping." The oscilloscope shows that no more useful power is being developed. The meter reads higher, but only distortion is developed.

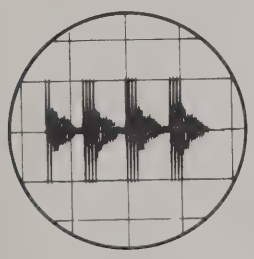

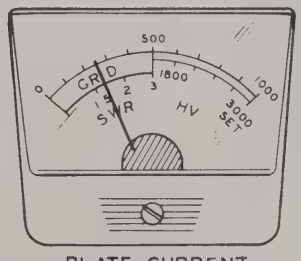

PLATE CURRENT

Oscilloscope pattern and plate meter reading resulting from over modulation. The meter reads higher, but the scope indicates peak flattening. Operation in this manner causes distortion and severe interference to adjacent frequencies.

Figure 2-7

IN CASE OF DIFFICULTY

1. Recheck the wiring. Trace each lead in colored pencil on the Pictorial as it is checked. It is frequently helpful to have a friend check your work. Someone who is not familiar with the unit may notice something consistently overlooked by the constructor.

2. It is interesting to note that about 90% of the kits that are returned for repair, do not function properly due to poor connections and soldering. Therefore, many troubles can be eliminated by reheating all connections to make sure that they are soldered as described in the Proper Soldering Techniques section of this manual.

3. Make sure that the tubes light up properly.

4. Check the tubes with a tube tester or by substitution of tubes of the same types and known to be good.

5. Check the values of the parts. Be sure that the proper part has been wired into the circuit, as shown in the Pictorial Diagrams and as called out in the wiring instructions.

6. Check for bits of solder, wire ends or other foreign matter which may be lodged in the wiring.

7. If, after careful checks, the trouble is still not located and a voltmeter is available, check voltage readings against those shown on the Schematic Diagram. NOTE: All voltage readings were taken with an 11 megohm input vacuum tube voltmeter. Voltages may vary as much as 10%.

8. A review of the Circuit Description will prove helpful in indicating where to look for trouble.

NOTE: In an extreme case where you are unable to resolve a difficulty, refer to the Service and Warranty sections of the "Kit Builders Guide", and to the "Factory Repair Service" information on Page 51 of this Manual.

FACTORY REPAIR SERVICE

You can return your completed kit to the Heath Company Service Department to have it repaired for a minimum service fee. (Kits that have been modified will not be accepted for repair.) Or, if you wish, you can deliver your kit to a nearby Heathkit Electronic Center. These centers are listed in your Heathkit catalog. NOTE: Do not include wooden cabinets, which are easily damaged in shipment, when returning equipment for service.

To be eligible for replacement parts under the terms of the warranty, equipment returned for factory repair service, or delivered to a Heathkit Electronic Center, must be accompanied by the invoice or the sales slip, or a copy of either. If you send the original invoice or sales slip, it will be returned to you.

If it is not convenient to deliver your kit to a Heathkit Electronic Center, please ship it to the factory at Benton Harbor, Michigan and observe the following shipping instructions:

Prepare a letter in duplicate, containing the following information:

- Your name and return address.
- Date of purchase.
- A brief description of the difficulty.
- The invoice or sales slip, or a copy of either.
- Your authorization to ship the repaired unit back to you C.O.D. for the service and shipping charges, plus the cost of parts not covered by the warranty.

Attach the envelope containing one copy of this letter directly to the unit before packaging, so that we do not overlook this important information. Send the second copy of the letter by separate mail to Heath Company, Attention: Service Department, Benton Harbor, Michigan 49022.

Check the equipment to see that all parts and screws are in place. Then, wrap the equipment in heavy paper. Place the equipment in a strong carton, and put at least THREE INCHES of resilient packing material (shredded paper, excelsior, etc.) on all sides, between the equipment and the carton. Seal the carton with gummed paper tape, and tie it with a strong cord. Ship it by prepaid express, United Parcel Service, or insured parcel post to:

Heath Company
Service Department
Benton Harbor, Michigan 49022

PART No.	PRICE Each	DESCRIPTION
WIRE-CABLE-SLEEVING		
89-22	1.40	Line cord
134-107	2.25	Cable assembly
340-1	.05/ft	Bare wire
344-52	.05/ft	Red solid hookup wire
344-54	.05/ft	Yellow solid hookup wire
344-55	.05/ft	Green solid hookup wire
344-58	.05/ft	Gray solid hookup wire
344-13	.05/ft	Large blue hookup wire
343-2	.10/ft	Large shielded cable
343-3	.05/ft	Small shielded cable
346-4	.05/ft	Small sleeving
346-3	.10/ft	Large sleeving
HARDWARE		
Screws		
250-213	.05	4-40 x 5/16"
250-28	.05	6-32 x 1/4" setscrew
250-8	.05	#6 x 3/8" sheet metal screw
250-138	.05	6-32 x 3/16" screw
250-56	.05	6-32 x 1/4"
250-89	.05	6-32 x 3/8"
250-218	.05	6-32 x 3/8" phillips head
250-32	.05	6-32 x 3/8" flat head
250-26	.05	6-32 x 5/8"
250-29	.05	6-32 x 3/4"
250-40	.05	6-32 x 1-1/2"
250-260	.05	8-32 x 1/4"
250-43	.05	8-32 x 1/4" setscrew
250-141	.05	10-24 x 1/2"
250-126	.05	10-32 x 1/2"
250-67	.05	10-24 x 1-1/8" phillips head
251-1	.05	6-32 spade bolt
Nuts		
252-15	.05	4-40
252-3	.05	6-32
252-30	.05	10-24
252-31	.10	10-24 wingnut
252-7	.05	Control
WASHERS		
253-27	.05	5/16" flat steel
253-8	.05	7/16" flat brass
253-60	.05	3/8" flat steel
253-1	.05	3/8" fiber flat
253-3	.05	1/2" fiber flat
253-7	.05	1/2" fiber shoulder
253-10	.05	Flat control
253-19	.05	3/4" flat steel
254-9	.05	#4 lockwasher
254-1	.05	#6 lockwasher
254-3	.05	#10 lockwasher
254-4	.05	Control lockwasher

PART No.	PRICE Each	DESCRIPTION
MISCELLANEOUS		
255-2	.05	3/16" spacer
255-42	.30	3/4" phenolic spacer
255-12	.10	Plastic spacer
255-59	.15	Tapered spacer
259-1	.05	#6 solder lug
259-5	.05	#10 solder lug
259-10	.05	Control solder lug
260-34	.25	Anode clip
435-1	.05	Socket ring
METAL PARTS		
40-100	.20	Coaxial cavity
90-341	20.80	Cabinet
200-403-1	6.60	Chassis
203-384-1	1.55	Front panel
205-492	.10	Capacitor mounting bracket
204-560	.25	Angle bracket
204-611*	.15	Circuit breaker mounting bracket
206-254	1.90	RF shield
206-255	.50	Power supply shield
205-438	1.75	Top plate
MISCELLANEOUS		
85-88-2	3.20	Circuit board
261-9	.05	Rubber foot
266-21	.60	Fan blade
390-147	.10	DANGER label
391-31	.15	Nameplate
407-103	11.40	Meter
420-3	5.00	Motor
432-27	.40	3-prong AC adapter
462-191	.70	Small knob
462-210	1.05	Large knob
331-6	.15	Solder
	2.00	Manual (See front cover for part number.)

The above prices apply only on purchases from the Heath Company where shipment is to a U.S.A. destination. Add 10% (minimum 25 cents) to the price when ordering from a Heathkit Electronic Center to cover local sales tax, postage and handling. Outside the U.S.A. parts and service are available from your local Heathkit source and will reflect additional transportation, taxes, duties and rates of exchange.

REPLACEMENT PARTS PRICE LIST

To order parts, use the Parts Order Form furnished with this kit. If Parts Order Form is not available, refer to "Replacement Parts" in the "Kit Builders Guide".

PART No.	PRICE Each	DESCRIPTION
RESISTORS		
1/2 Watt		
1-140	.15	1.5 Ω
1-3	.10	100 Ω
1-16	.10	4700 Ω
1-21	.10	15 KΩ
2-121	.10	3600 Ω precision
1 Watt		
1-14-1	.10	33 Ω
1-3-1	.10	3300 Ω
1-38-1	.10	4.7 megohm
Other Resistors		
1-3-2	.20	10 KΩ 2 watt
3-25-5	.90	1 Ω 5 watt
3-12-7	.15	700 Ω 7 watt
3-14-7	.15	2000 Ω 7 watt
5-2-7	.30	30 KΩ 7 watt
3-2-17	.35	465 Ω 15 watt
CAPACITORS		
20-40	.20	470 μμf silver mica
20-123	.50	500 μμf 2 KV silver mica (.0005)
20-42	.20	510 μμf silver mica
20-76	.15	68 μμf mica
20-110	.15	75 μμf mica
20-108	.20	200 μμf mica
20-112	.25	310 μμf mica
20-131	.25	360 μμf mica
21-78	.10	5 μμf disc
21-60	.10	18 μμf disc
21-72	.20	.005 μfd 1.4 KV disc
21-90	.20	.001 μfd 3 KV disc
21-31	.10	.02 μfd disc
21-109	2.70	100 μμf 5 KV tubular ceramic
21-165	1.75	1000μμf 6 KV tubular ceramic
25-39	.60	2 μfd 150 V electrolytic
25-19	.55	20 μfd 150 V electrolytic
25-34	2.10	125 μfd 450 V electrolytic
26-96	12.40	150 μμf, 3 KV, variable
26-97	24.90	874.8 μμf variable, 2-section

PART No.	PRICE Each	DESCRIPTION
CONTROLS-SWITCHES		
10-12	.45	100 KΩ control
61-14	2.40	DPST rocker switch
63-351	4.35	3-wafer rotary switch
63-352	3.05	1-wafer rotary switch
65-15	1.80	8 ampere circuit breaker
69-5	5.00	DPDT 110 V AC relay
COILS-CHOKES-TRANSFORMERS		
40-98	.55	RF driver element
40-99	.10	RF pickup element
40-591	.55	80 meter input coil
40-592	.55	40 meter input coil
40-593	.55	20 meter input coil
40-727	.50	15 meter input coil
40-728	.50	10 meter input coil
40-596	1.40	10 and 15 meter final coil
40-597	4.00	20, 40, and 80 meter final coil
45-4	.40	1.1 mh RF choke
45-60	3.05	10 μh RF choke
45-18	.30	28 μh RF choke
45-61	.60	50 μh RF choke
45-53	.40	Parasitic RF choke
54-151	33.75	Power transformer
DIODES-TUBES		
56-26	.30	1N191 crystal diode
56-24	.60	1N458 silicon diode
57-27	.60	Silicon diode
411-198	17.95	572-B tube or T160-L
INSULATORS-GROMMETS-TERMINAL STRIPS-SOCKETS		
71-5	.45	Ceramic standoff insulator with 6-32 stud
73-4	.10	5/16" grommet
73-1	.10	3/8" grommet
73-3	.10	1/2" grommet
75-29	.60	Line cord strain relief
431-50	.10	1-lug terminal strip
431-16	.10	2-lug terminal strip
431-10	.10	3-lug terminal strip
431-11	.10	5-lug terminal strip
431-45	.10	6-lug terminal strip
431-13	.15	Screw type terminal strip
434-9	.30	4-lug tube socket
434-42	.10	Phono socket
436-5	.85	Coaxial socket
438-9	.75	Coaxial plug
438-12	.20	Coaxial plug insert
438-4	.10	Phono plug

TYPICAL COMPONENT TYPES

This chart is a guide to commonly used types of electronic components. The symbols and related illustrations should prove helpful in identifying most parts and reading the schematic diagrams.

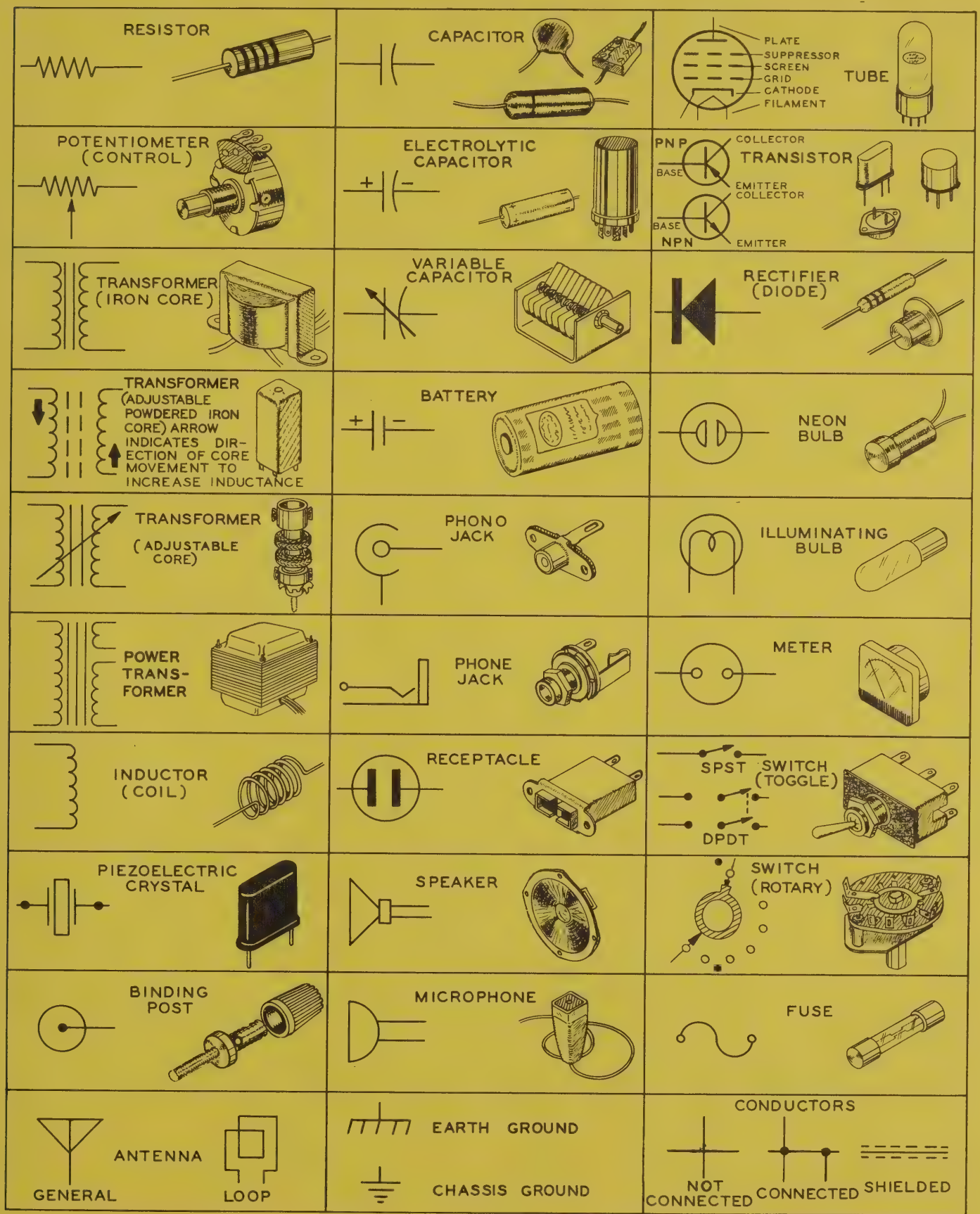

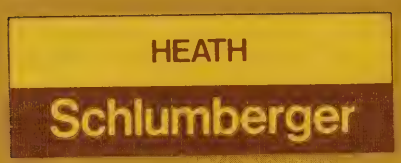

HEATH COMPANY • BENTON HARBOR, MICHIGAN

THE WORLD'S FINEST ELECTRONIC EQUIPMENT IN KIT FORM

LITHO IN U.S.A.

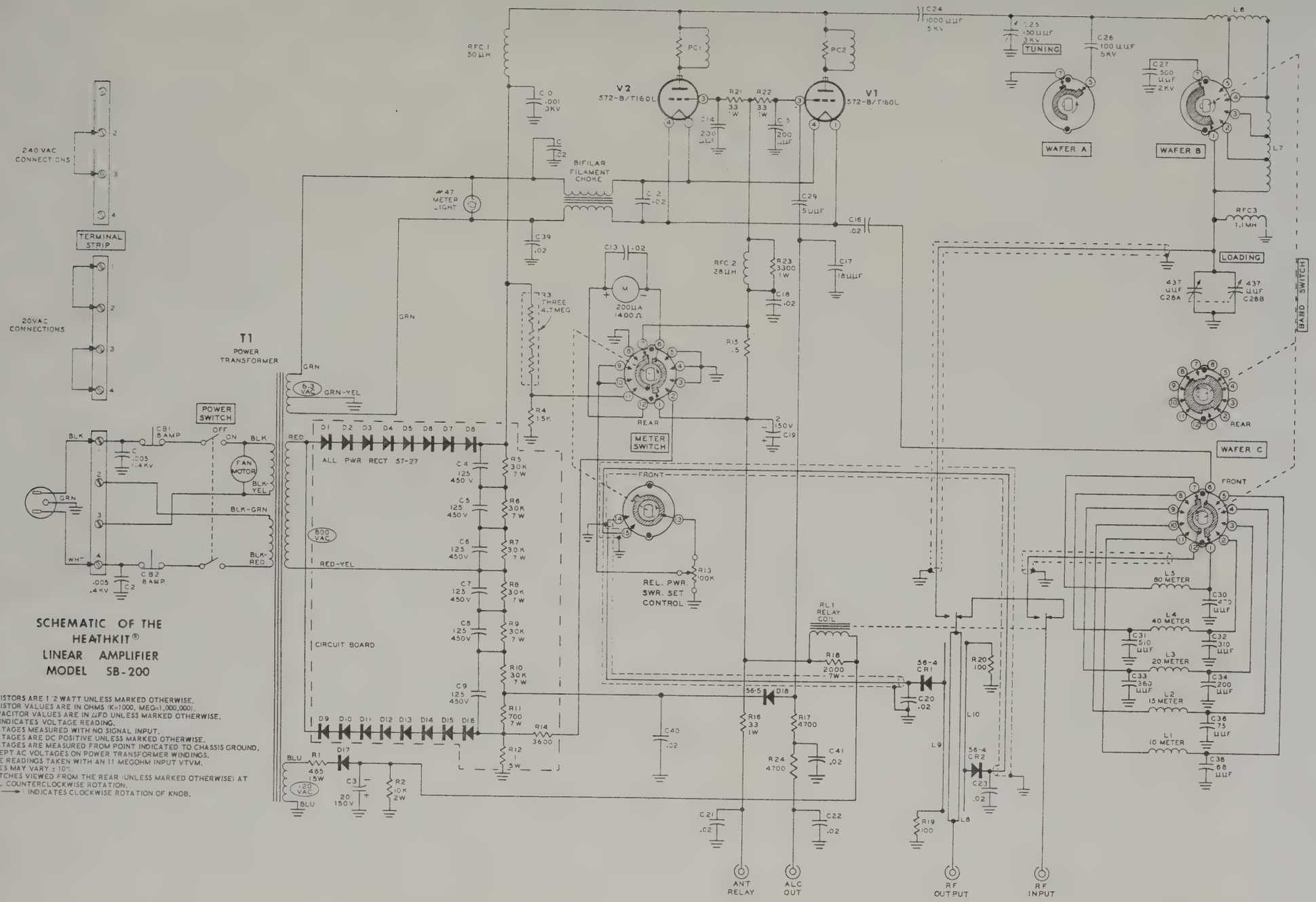

SCHEMATIC OF THE HEATHKIT® LINEAR AMPLIFIER MODEL SB-200

NOTES:
ALL RESISTORS ARE 1/2 WATT UNLESS MARKED OTHERWISE.
ALL RESISTOR VALUES ARE IN OHMS (K=1000, MEG=1,000,000).
ALL CAPACITOR VALUES ARE IN μFD UNLESS MARKED OTHERWISE.
(oval) INDICATES VOLTAGE READING.
ALL VOLTAGES MEASURED WITH NO SIGNAL INPUT.
ALL VOLTAGES ARE DC POSITIVE UNLESS MARKED OTHERWISE.
ALL VOLTAGES ARE MEASURED FROM POINT INDICATED TO CHASSIS GROUND, EXCEPT AC VOLTAGES ON POWER TRANSFORMER WINDINGS.
VOLTAGE READINGS TAKEN WITH AN 11 MEGOHM INPUT VTVM.
VOLTAGES MAY VARY ± 10%.
ALL SWITCHES VIEWED FROM THE REAR (UNLESS MARKED OTHERWISE) AT FULL COUNTERCLOCKWISE ROTATION.
ARROW (→) INDICATES CLOCKWISE ROTATION OF KNOB.

SB-00

SB 200

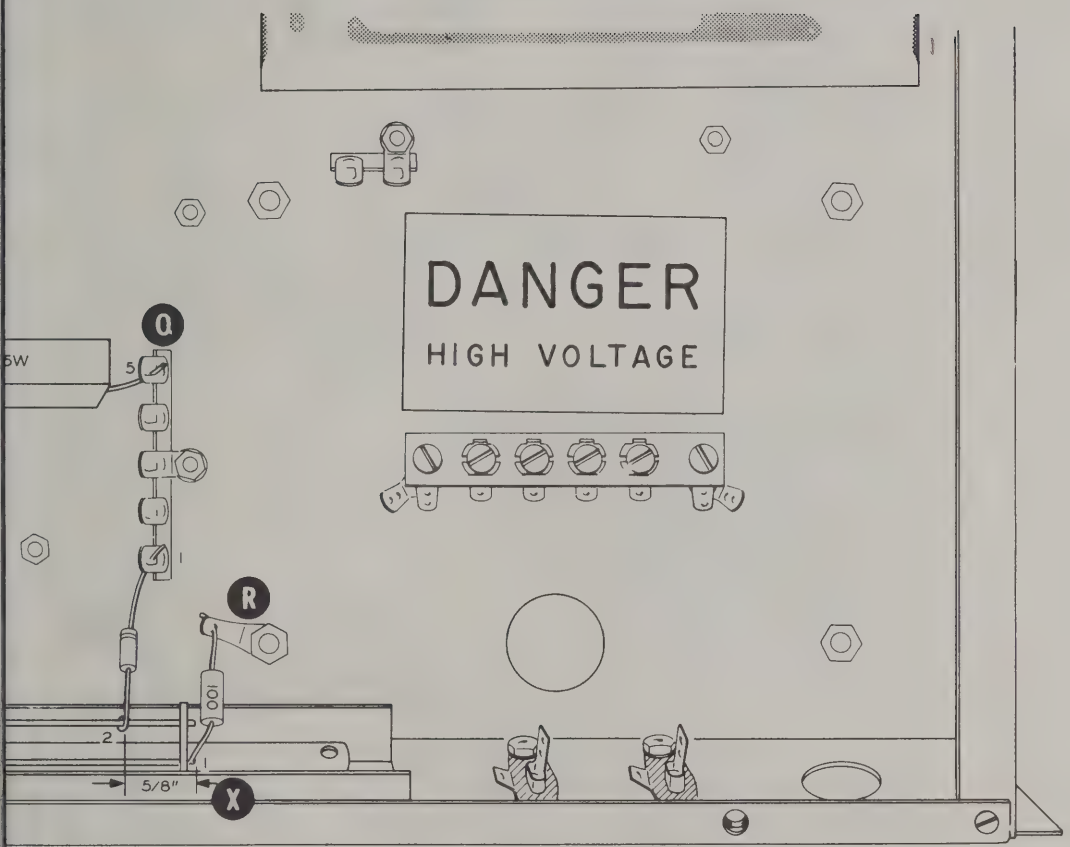

RIAL 8

SB-[illegible]00
SB 200

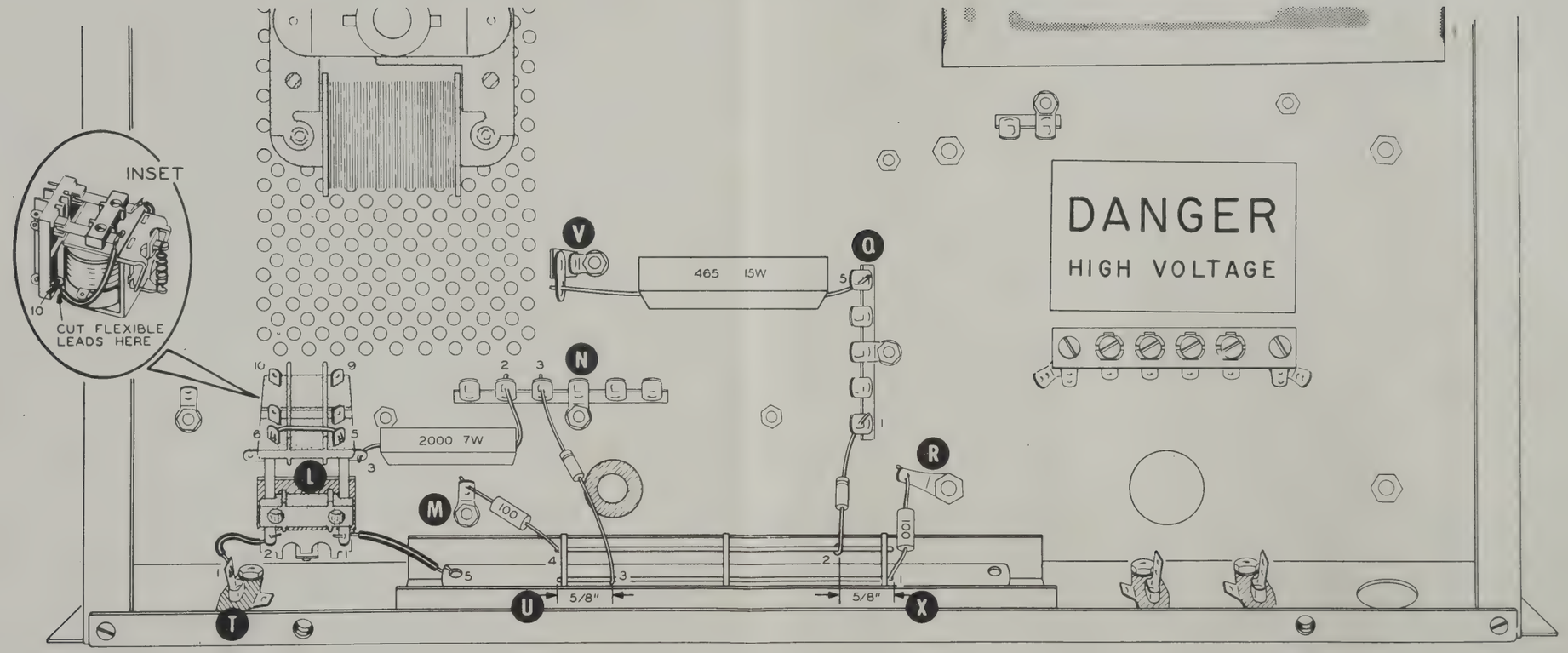
INSET
10
CUT FLEXIBLE LEADS HERE
DANGER
HIGH VOLTAGE
V
Q
465 15W
5
N
2
3
10
9
6
5
3
2000 7W
L
M
100
2
1
5
4
3
2
1
5/8"
5/8"
T
U
X
R

PICTORIAL 8

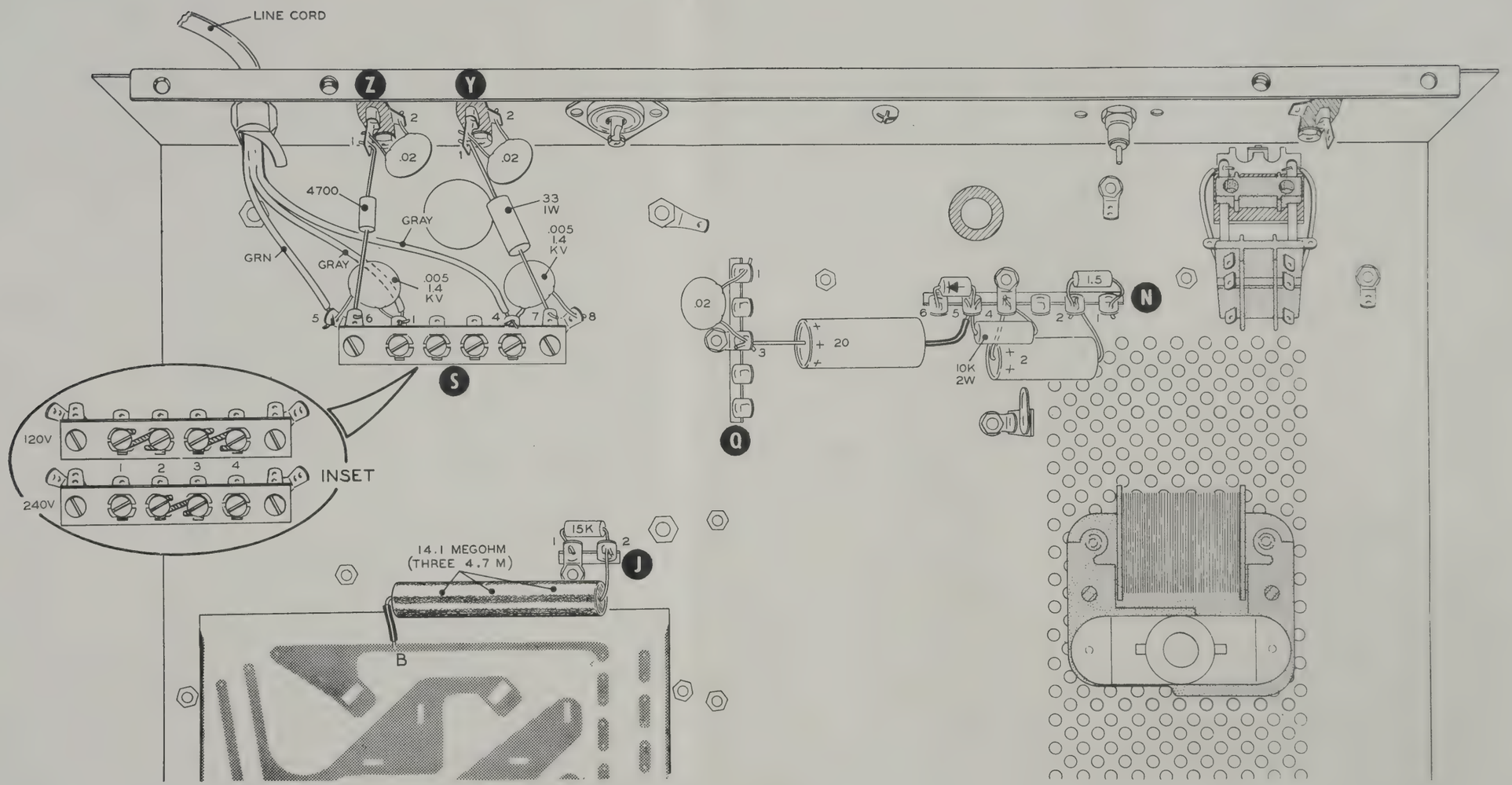

PICTORIAL 7

29

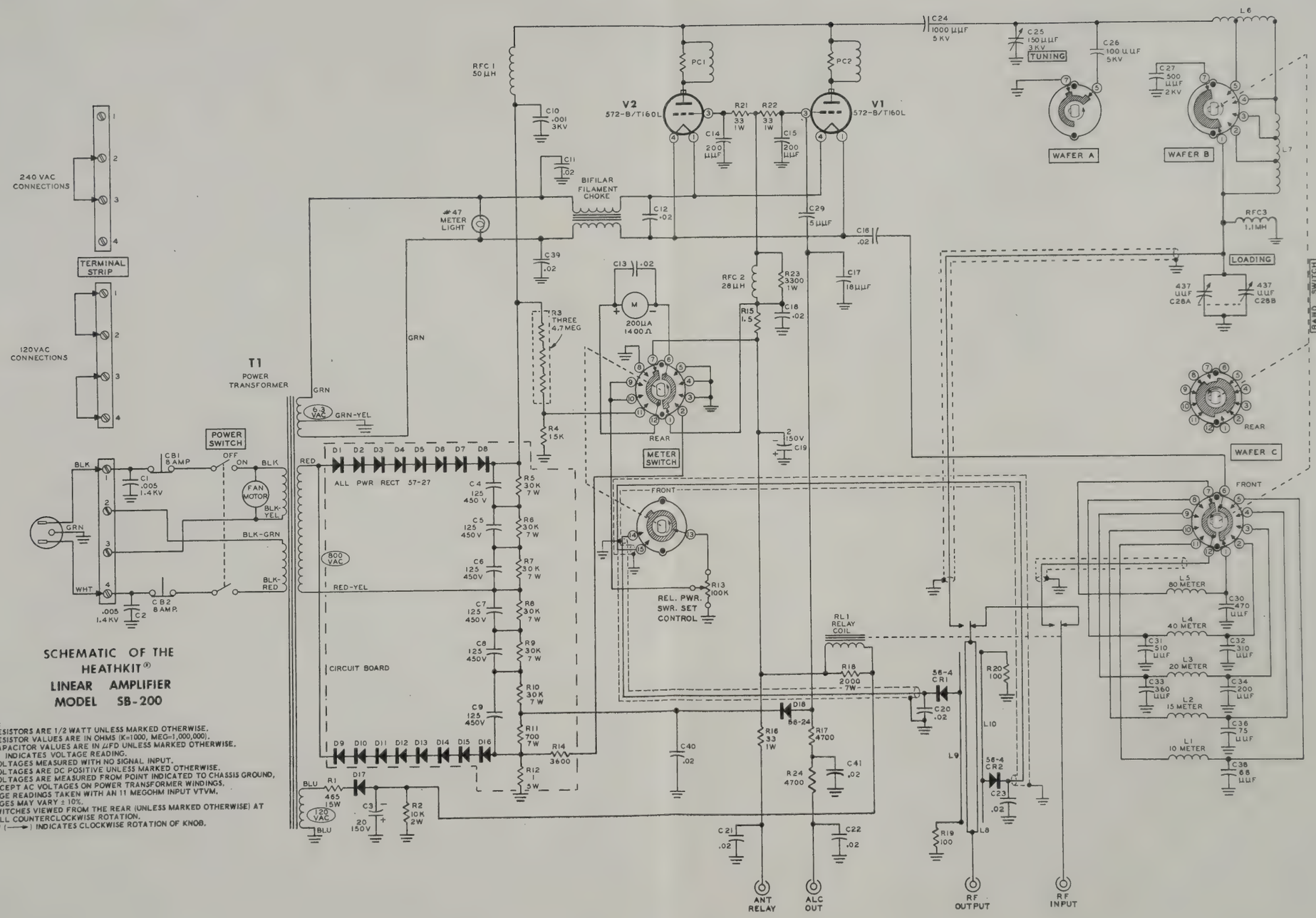

SCHEMATIC OF THE HEATHKIT® LINEAR AMPLIFIER MODEL SB-200

NOTES:
ALL RESISTORS ARE 1/2 WATT UNLESS MARKED OTHERWISE.
ALL RESISTOR VALUES ARE IN OHMS (K=1000, MEG=1,000,000).
ALL CAPACITOR VALUES ARE IN µFD UNLESS MARKED OTHERWISE.
( ) INDICATES VOLTAGE READING.
ALL VOLTAGES MEASURED WITH NO SIGNAL INPUT.
ALL VOLTAGES ARE DC POSITIVE UNLESS MARKED OTHERWISE.
ALL VOLTAGES ARE MEASURED FROM POINT INDICATED TO CHASSIS GROUND, EXCEPT AC VOLTAGES ON POWER TRANSFORMER WINDINGS.
VOLTAGE READINGS TAKEN WITH AN 11 MEGOHM INPUT VTVM.
VOLTAGES MAY VARY ± 10%.
ALL SWITCHES VIEWED FROM THE REAR (UNLESS MARKED OTHERWISE) AT FULL COUNTERCLOCKWISE ROTATION.
ARROW (⟶) INDICATES CLOCKWISE ROTATION OF KNOB.

REPLACEMENT PARTS PRICE LIST

To order parts, use the Parts Order Form furnished with this kit. If Parts Order Form is not available, refer to "Replacement Parts" in the "Kit Builders Guide".

PART No.	PRICE Each	DESCRIPTION
RESISTORS		
1/2 Watt		
1-140	.15	1.5 Ω
1-3	.10	100 Ω
1-16	.10	4700 Ω
1-21	.10	15 KΩ
2-121	.10	3600 Ω precision
1 Watt		
1-14-1	.10	33 Ω
1-3-1	.10	3300 Ω
1-38-1	.10	4.7 megohm
Other Resistors		
1-3-2	.20	10 KΩ 2 watt
3-25-5	.90	1 Ω 5 watt
3-12-7	.15	700 Ω 7 watt
3-14-7	.15	2000 Ω 7 watt
5-2-7	.30	30 KΩ 7 watt
3-2-17	.35	465 Ω 15 watt
CAPACITORS		
20-40	.20	470 μμf silver mica
20-123	.50	500 μμf 2 KV silver mica (.0005)
20-42	.20	510 μμf silver mica
20-76	.15	68 μμf mica
20-110	.15	75 μμf mica
20-108	.20	200 μμf mica
20-112	.25	310 μμf mica
20-131	.25	360 μμf mica
21-78	.10	5 μμf disc
21-60	.10	18 μμf disc
21-72	.20	.005 μfd 1.4 KV disc
21-90	.20	.001 μfd 3 KV disc
21-31	.10	.02 μfd disc
21-109	2.70	100 μμf 5 KV tubular ceramic
21-165	1.75	1000μμf 6 KV tubular ceramic
25-39	.60	2 μfd 150 V electrolytic
25-19	.55	20 μfd 150 V electrolytic
25-34	2.10	125 μfd 450 V electrolytic
26-96	12.40	150 μμf, 3 KV, variable
26-97	24.90	874.8 μμf variable, 2-section

PART No.	PRICE Each	DESCRIPTION
CONTROLS-SWITCHES		
10-12	.45	100 KΩ control
61-14	2.40	DPST rocker switch
63-351	4.35	3-wafer rotary switch
63-352	3.05	1-wafer rotary switch
65-15	1.80	8 ampere circuit breaker
69-5	5.00	DPDT 110 V AC relay
COILS-CHOKES-TRANSFORMERS		
40-98	.55	RF driver element
40-99	.10	RF pickup element
40-591	.55	80 meter input coil
40-592	.55	40 meter input coil
40-593	.55	20 meter input coil
40-727	.50	15 meter input coil
40-728	.50	10 meter input coil
40-596	1.40	10 and 15 meter final coil
40-597	4.00	20, 40, and 80 meter final coil
45-4	.40	1.1 mh RF choke
45-60	3.05	10 μh RF choke
45-18	.30	28 μh RF choke
45-61	.60	50 μh RF choke
45-53	.40	Parasitic RF choke
54-151	33.75	Power transformer
DIODES-TUBES		
56-26	.30	1N191 crystal diode
56-24	.60	1N458 silicon diode
57-27	.60	Silicon diode
411-198	17.95	572-B tube or T160-L
INSULATORS-GROMMETS-TERMINAL STRIPS-SOCKETS		
71-5	.45	Ceramic standoff insulator with 6-32 stud
73-4	.10	5/16" grommet
73-1	.10	3/8" grommet
73-3	.10	1/2" grommet
75-29	.60	Line cord strain relief
431-50	.10	1-lug terminal strip
431-16	.10	2-lug terminal strip
431-10	.10	3-lug terminal strip
431-11	.10	5-lug terminal strip
431-45	.10	6-lug terminal strip
431-13	.15	Screw type terminal strip
434-9	.30	4-lug tube socket
434-42	.10	Phono socket
436-5	.85	Coaxial socket
438-9	.75	Coaxial plug
438-12	.20	Coaxial plug insert
438-4	.10	Phono plug

PART No.	PRICE Each	DESCRIPTION
WIRE-CABLE-SLEEVING		
89-22	1.40	Line cord
134-107	2.25	Cable assembly
340-1	.05/ft	Bare wire
344-52	.05/ft	Red solid hookup wire
344-54	.05/ft	Yellow solid hookup wire
344-55	.05/ft	Green solid hookup wire
344-58	.05/ft	Gray solid hookup wire
344-13	.05/ft	Large blue hookup wire
343-2	.10/ft	Large shielded cable
343-3	.05/ft	Small shielded cable
346-4	.05/ft	Small sleeving
346-3	.10/ft	Large sleeving
HARDWARE		
Screws		
250-213	.05	4-40 x 5/16"
250-28	.05	6-32 x 1/4" setscrew
250-8	.05	#6 x 3/8" sheet metal screw
250-138	.05	6-32 x 3/16" screw
250-56	.05	6-32 x 1/4"
250-89	.05	6-32 x 3/8"
250-218	.05	6-32 x 3/8" phillips head
250-32	.05	6-32 x 3/8" flat head
250-26	.05	6-32 x 5/8"
250-29	.05	6-32 x 3/4"
250-40	.05	6-32 x 1-1/2"
250-260	.05	8-32 x 1/4"
250-43	.05	8-32 x 1/4" setscrew
250-141	.05	10-24 x 1/2"
250-126	.05	10-32 x 1/2"
250-67	.05	10-24 x 1-1/8" phillips head
251-1	.05	6-32 spade bolt
Nuts		
252-15	.05	4-40
252-3	.05	6-32
252-30	.05	10-24
252-31	.10	10-24 wingnut
252-7	.05	Control
WASHERS		
253-27	.05	5/16" flat steel
253-8	.05	7/16" flat brass
253-60	.05	3/8" flat steel
253-1	.05	3/8" fiber flat
253-3	.05	1/2" fiber flat
253-7	.05	1/2" fiber shoulder
253-10	.05	Flat control
253-19	.05	3/4" flat steel
254-9	.05	#4 lockwasher
254-1	.05	#6 lockwasher
254-3	.05	#10 lockwasher
254-4	.05	Control lockwasher

PART No.	PRICE Each	DESCRIPTION
MISCELLANEOUS		
255-2	.05	3/16" spacer
255-42	.30	3/4" phenolic spacer
255-12	.10	Plastic spacer
255-59	.15	Tapered spacer
259-1	.05	#6 solder lug
259-5	.05	#10 solder lug
259-10	.05	Control solder lug
260-34	.25	Anode clip
435-1	.05	Socket ring
METAL PARTS		
40-100	.20	Coaxial cavity
90-341	20.80	Cabinet
200-403-1	6.60	Chassis
203-384-1	1.55	Front panel
205-492	.10	Capacitor mounting bracket
204-560	.25	Angle bracket
204-611	.15	Circuit breaker mounting bracket
206-254	1.90	RF shield
206-255	.50	Power supply shield
205-438	1.75	Top plate
MISCELLANEOUS		
85-88-2	3.20	Circuit board
261-9	.05	Rubber foot
266-21	.60	Fan blade
390-147	.10	DANGER label
391-31	.15	Nameplate
407-103	11.40	Meter
420-3	5.00	Motor
432-27	.40	3-prong AC adapter
462-191	.70	Small knob
462-210	1.05	Large knob
331-6	.15	Solder
	2.00	Manual (See front cover for part number.)

The above prices apply only on purchases from the Heath Company where shipment is to a U.S.A. destination. Add 10% (minimum 25 cents) to the price when ordering from a Heathkit Electronic Center to cover local sales tax, postage and handling. Outside the U.S.A. parts and service are available from your local Heathkit source and will reflect additional transportation, taxes, duties and rates of exchange.

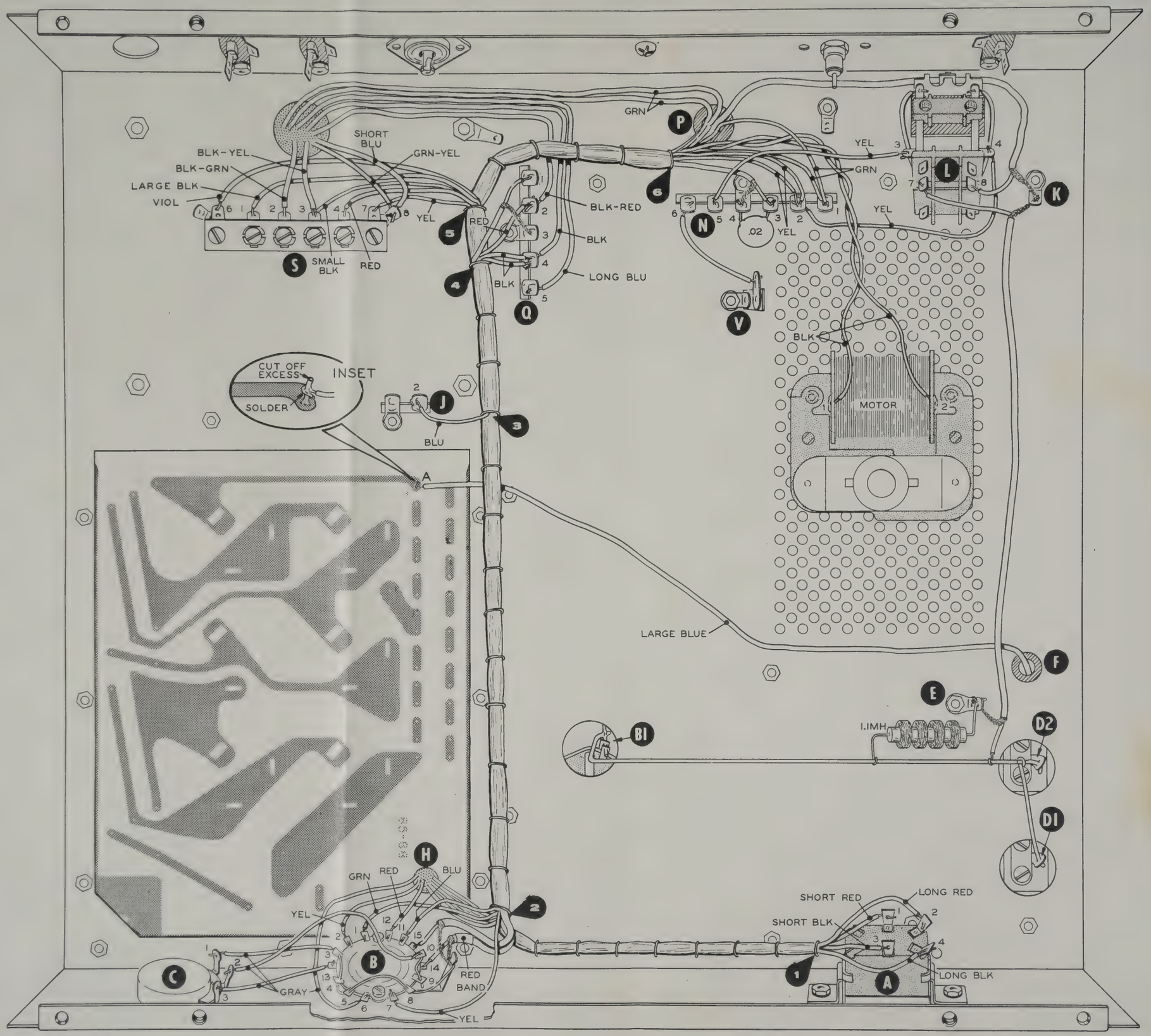
BLK-YEL
BLK-GRN
LARGE BLK
VIOL
SHORT BLU
GRN-YEL
YEL
RED
SMALL BLK
RED
S
5
4
BLK
Q
BLK-RED
BLK
LONG BLU
GRN
P
6
N
.02
YEL
YEL
GRN
YEL
L
K
V
BLK
MOTOR
CUT OFF EXCESS
SOLDER
INSET
J
BLU
3
A
LARGE BLUE
F
E
1.1MH
B1
D2
D1
H
GRN
RED
BLU
YEL
2
B
C
GRAY
RED BAND
YEL
SHORT RED
LONG RED
SHORT BLK
1
A
LONG BLK

PICTORIAL 6

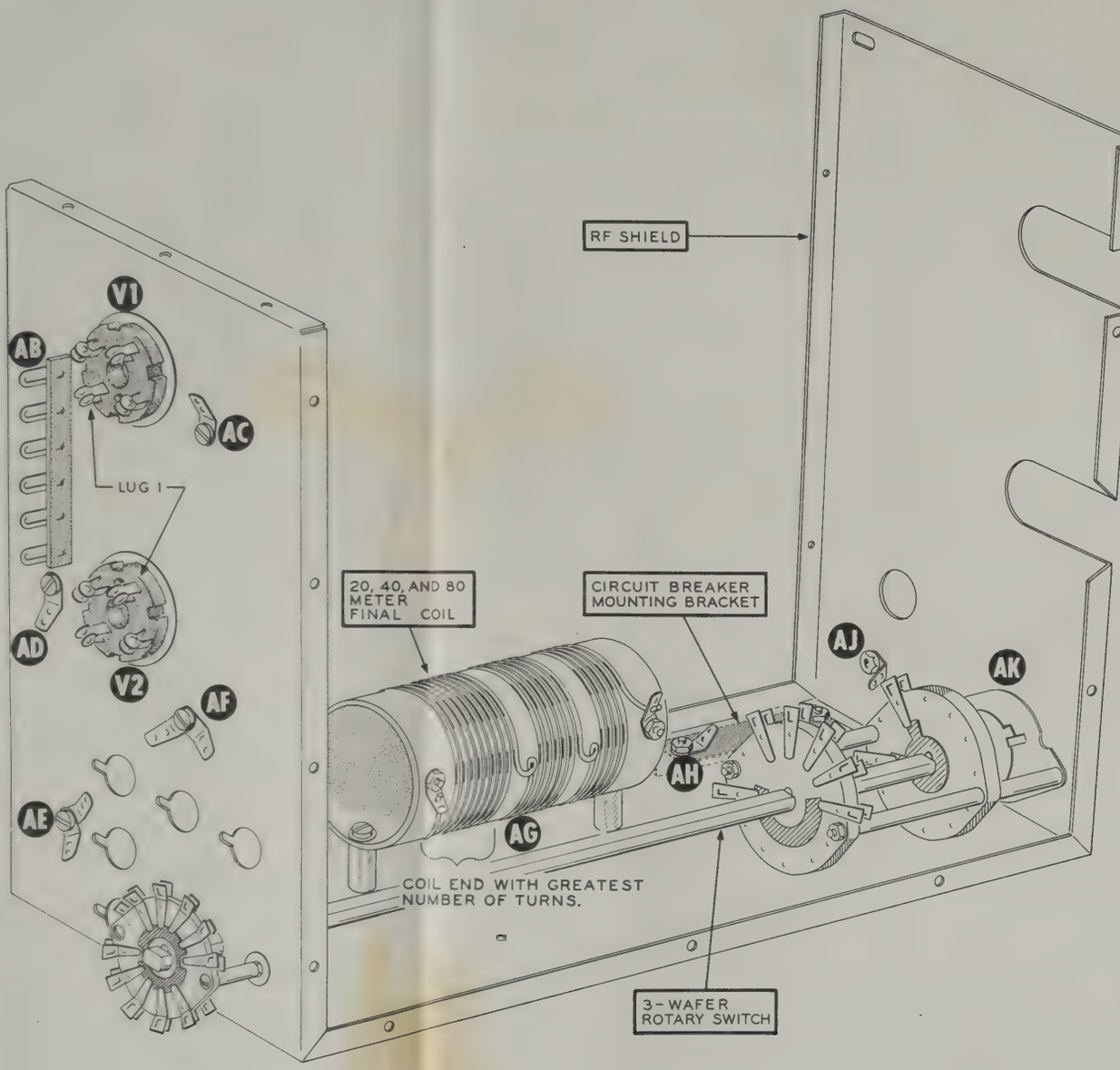
RF SHIELD
V1
AB
AC
LUG 1
AD
V2
AF
AE
20, 40, AND 80 METER FINAL COIL
CIRCUIT BREAKER MOUNTING BRACKET
AJ
AK
AH
AG
COIL END WITH GREATEST NUMBER OF TURNS.
3-WAFER ROTARY SWITCH

PICTORIAL 3

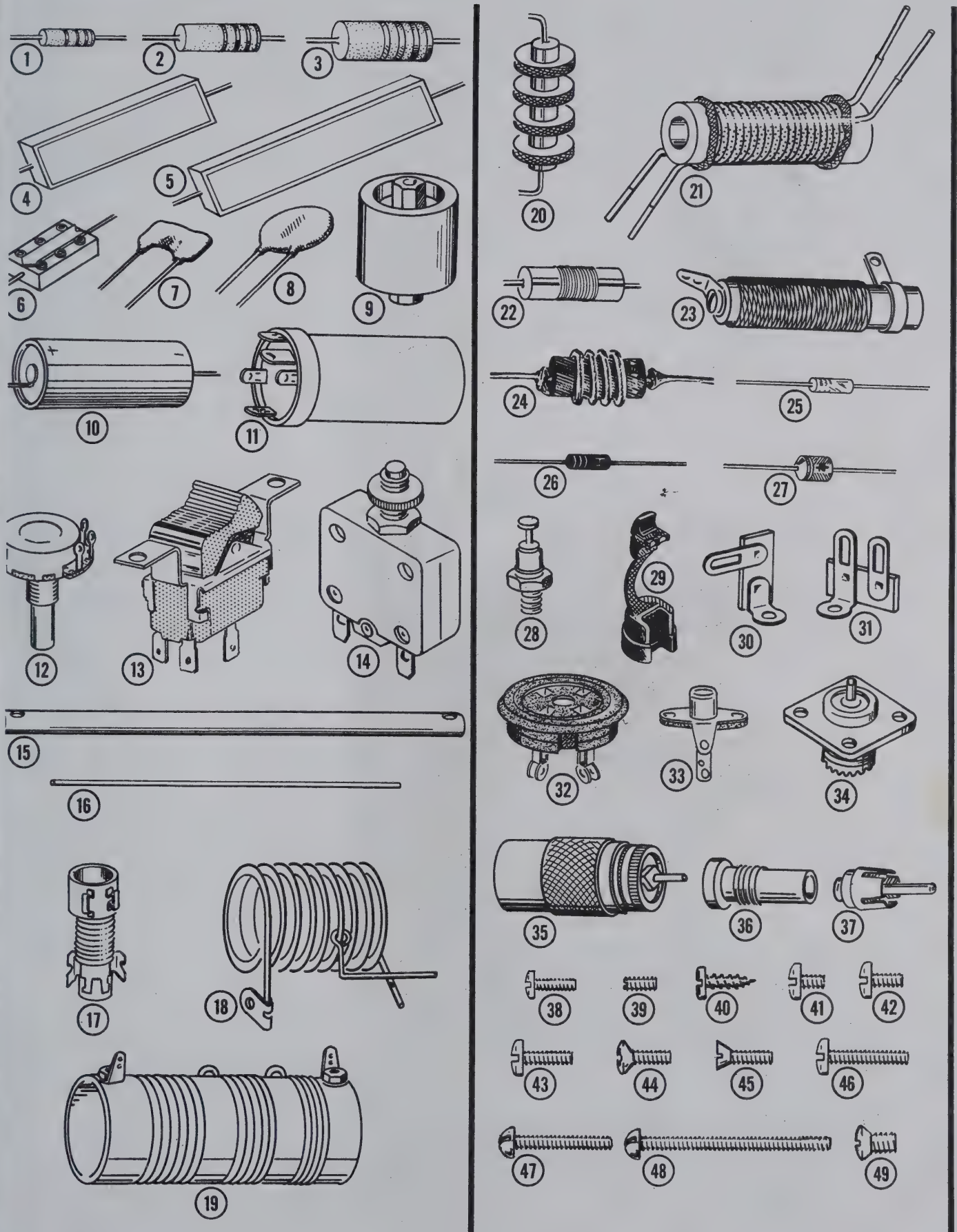
1
2
3
4
5
6
7
8
9
10
11
12
13
14
15
16
17
18
19
20
21
22
23
24
25
26
27
28
29
30
31
32
33
34
35
36
37
38
39
40
41
42
43
44
45
46
47
48
49

TORIAL

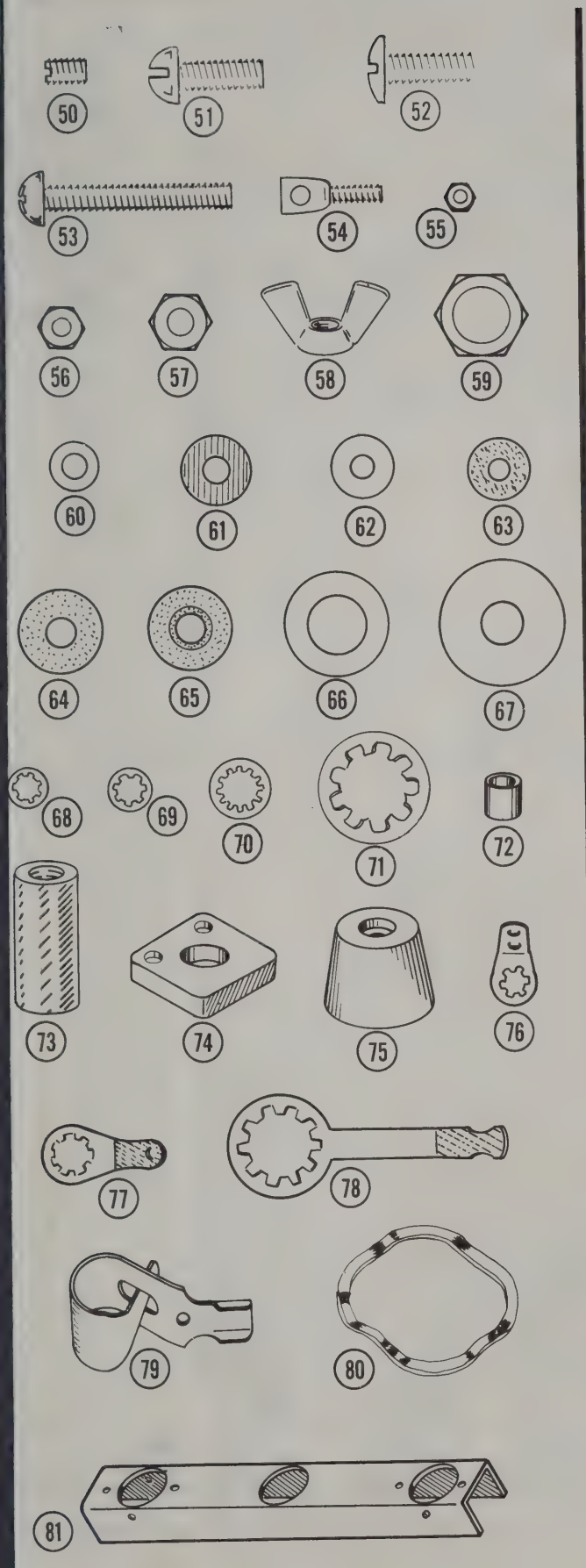
50
51
52
53
54
55
56
57
58
59
60
61
62
63
64
65
66
67
68
69
70
71
72
73
74
75
76
77
78
79
80
81

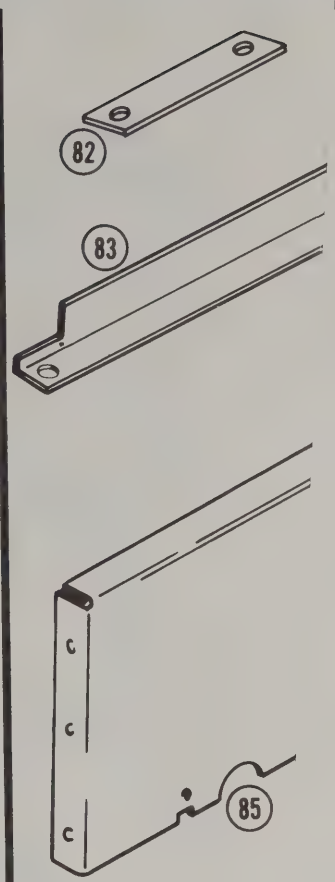
82
83
85

PARTS PICTORIAL

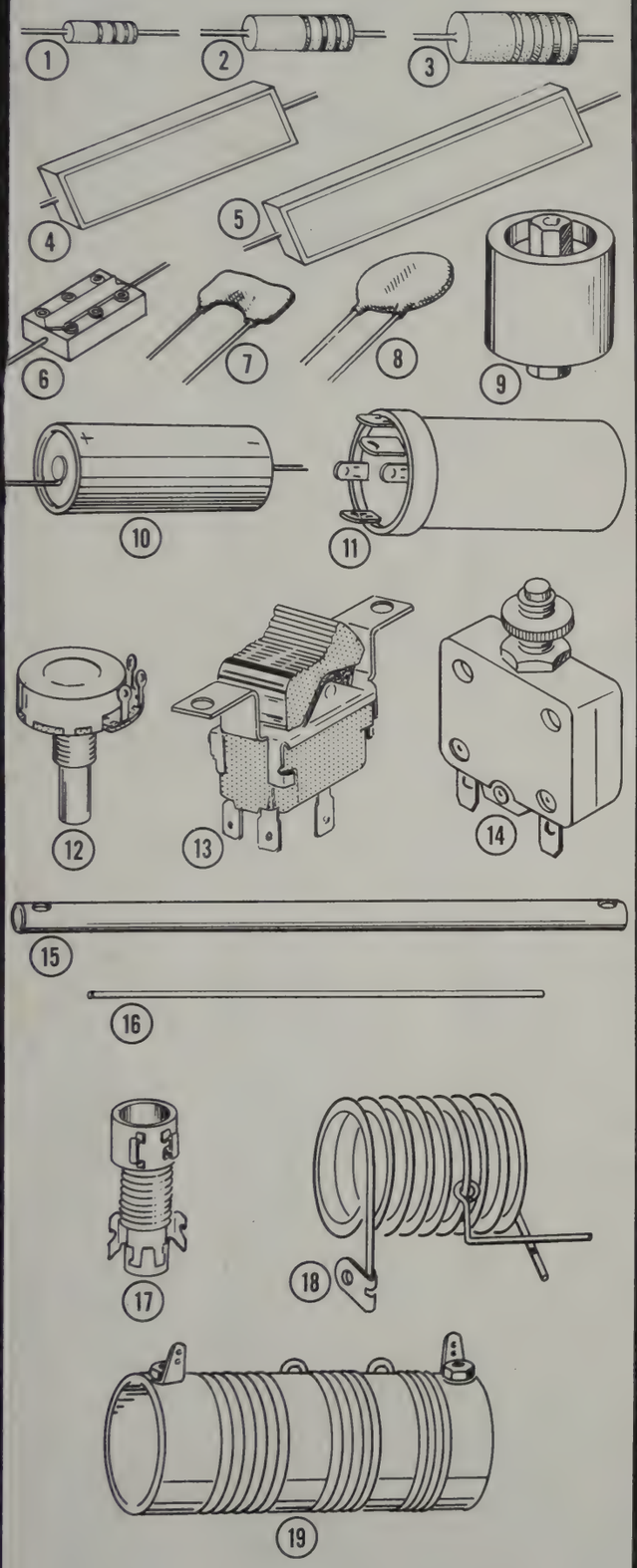

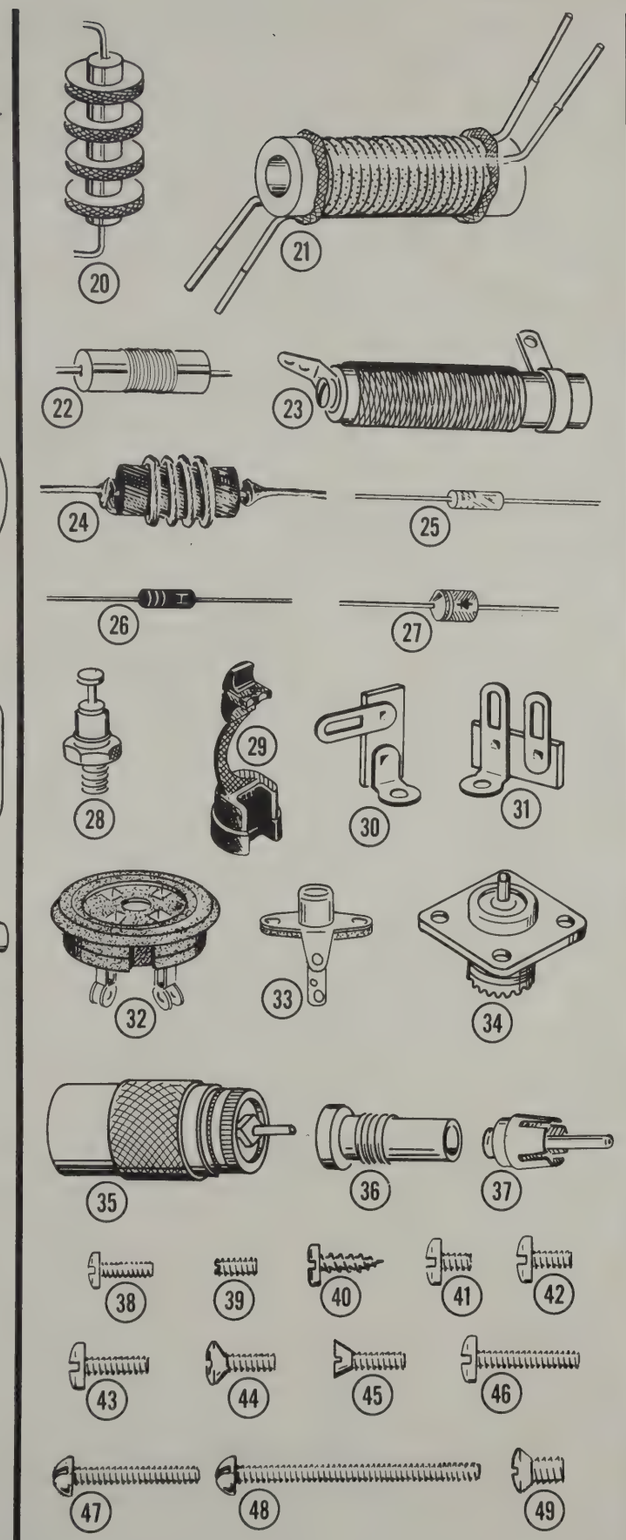

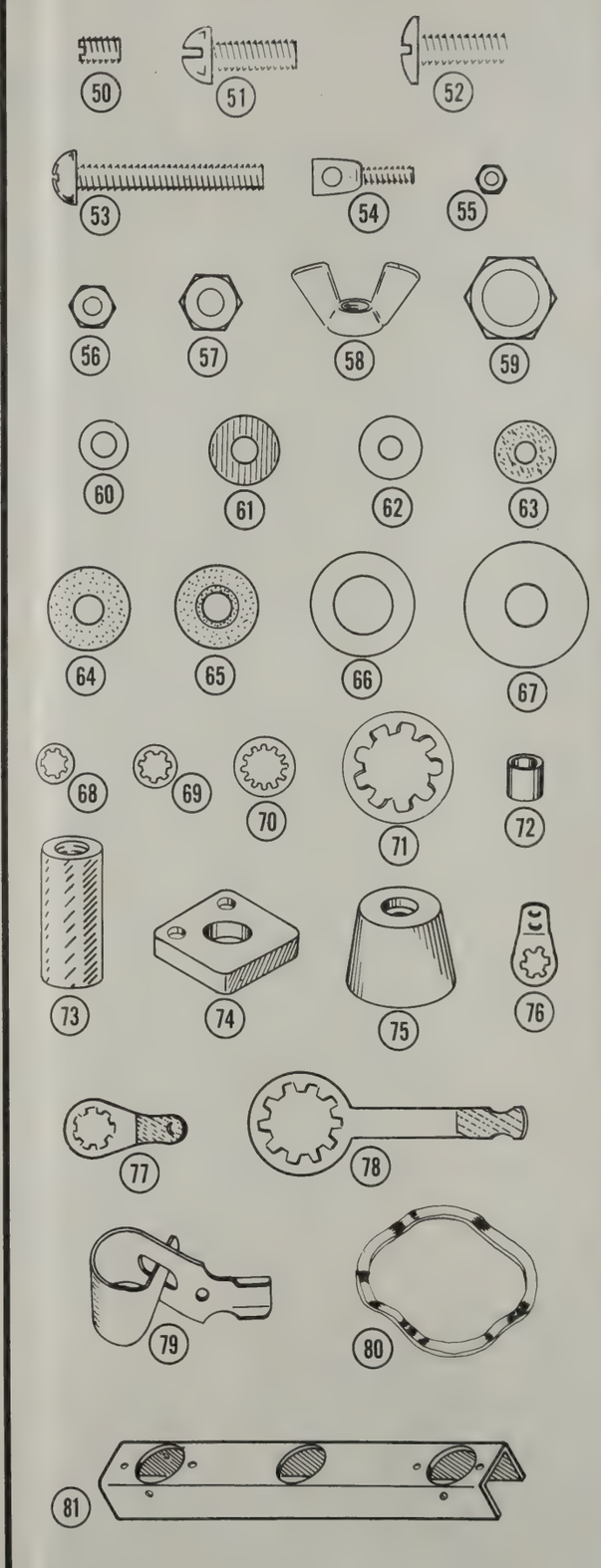

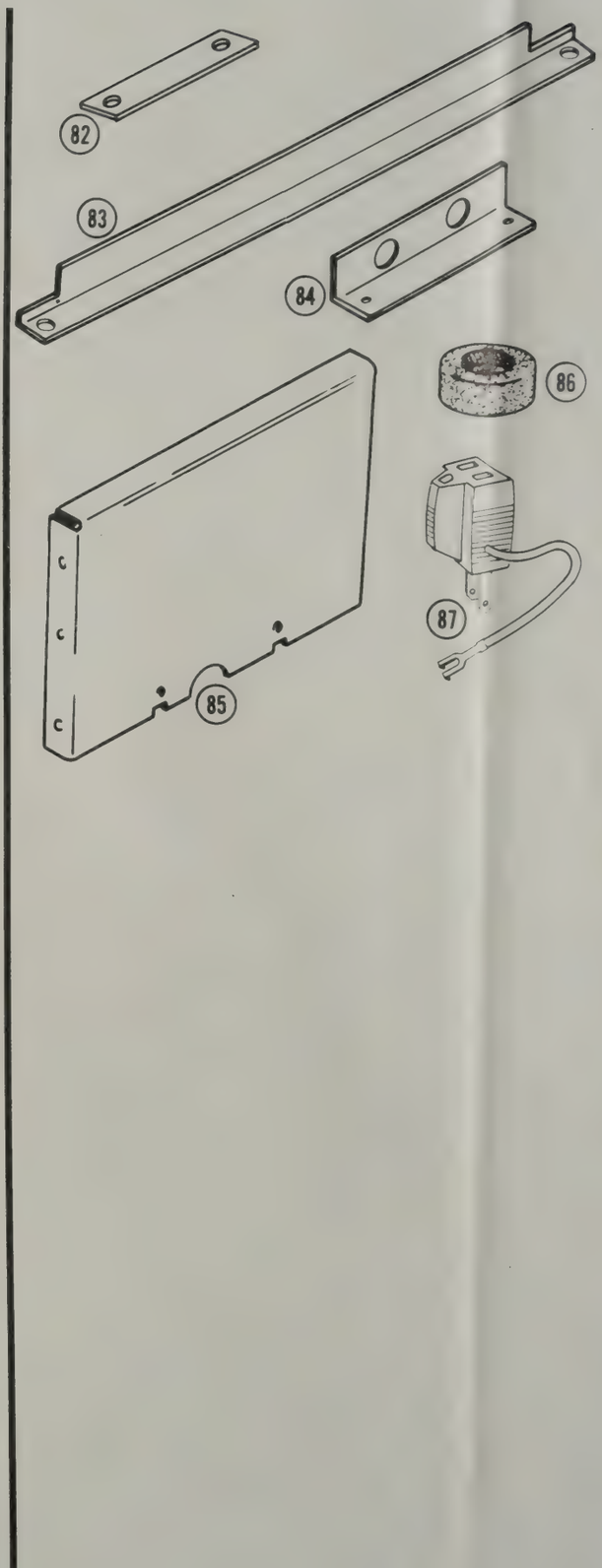

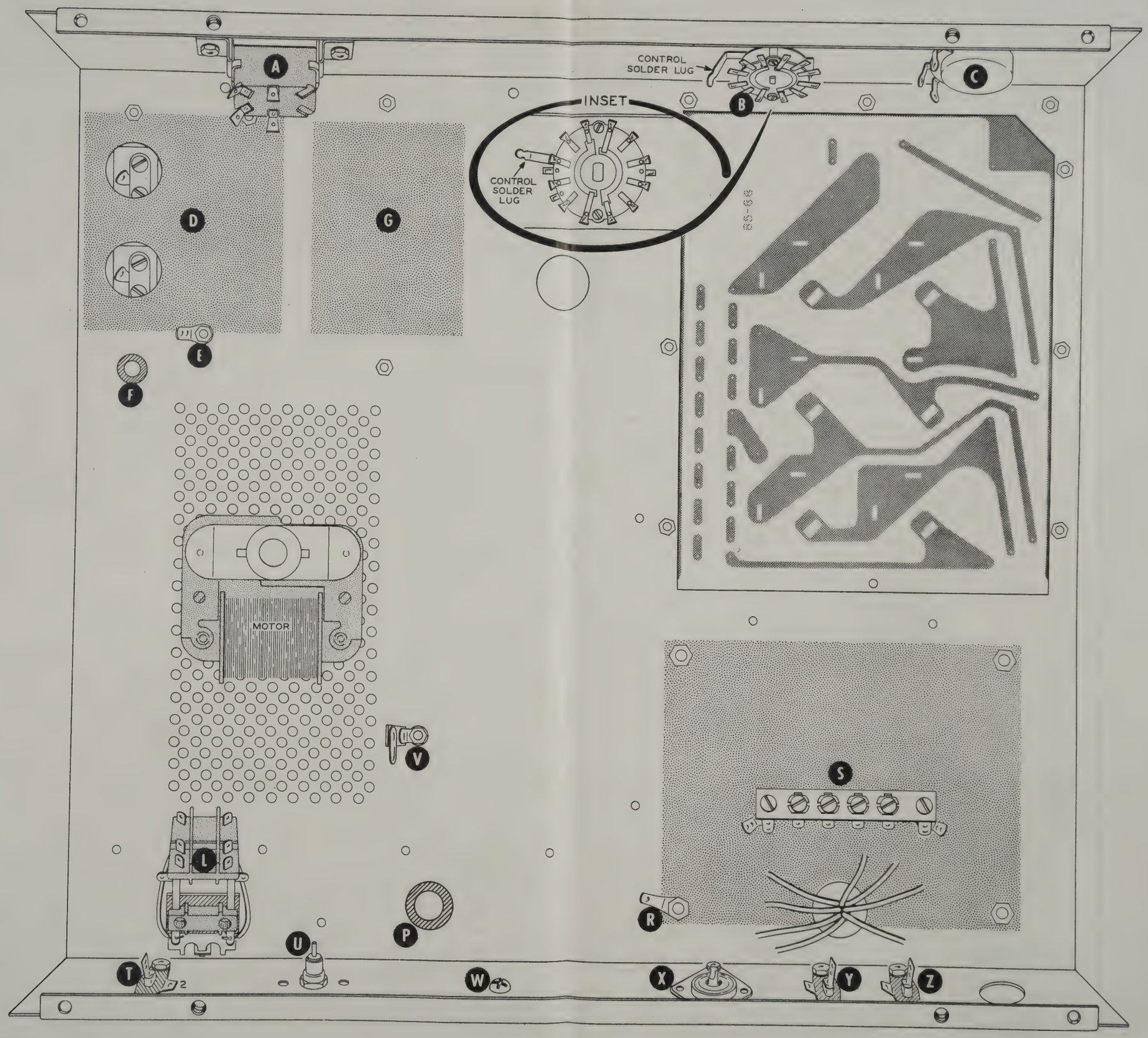
A
CONTROL SOLDER LUG
B
C
INSET
CONTROL SOLDER LUG
D
G
E
F
MOTOR
V
L
P
U
T
W
X
Y
Z
S
R

PICTORIAL 2

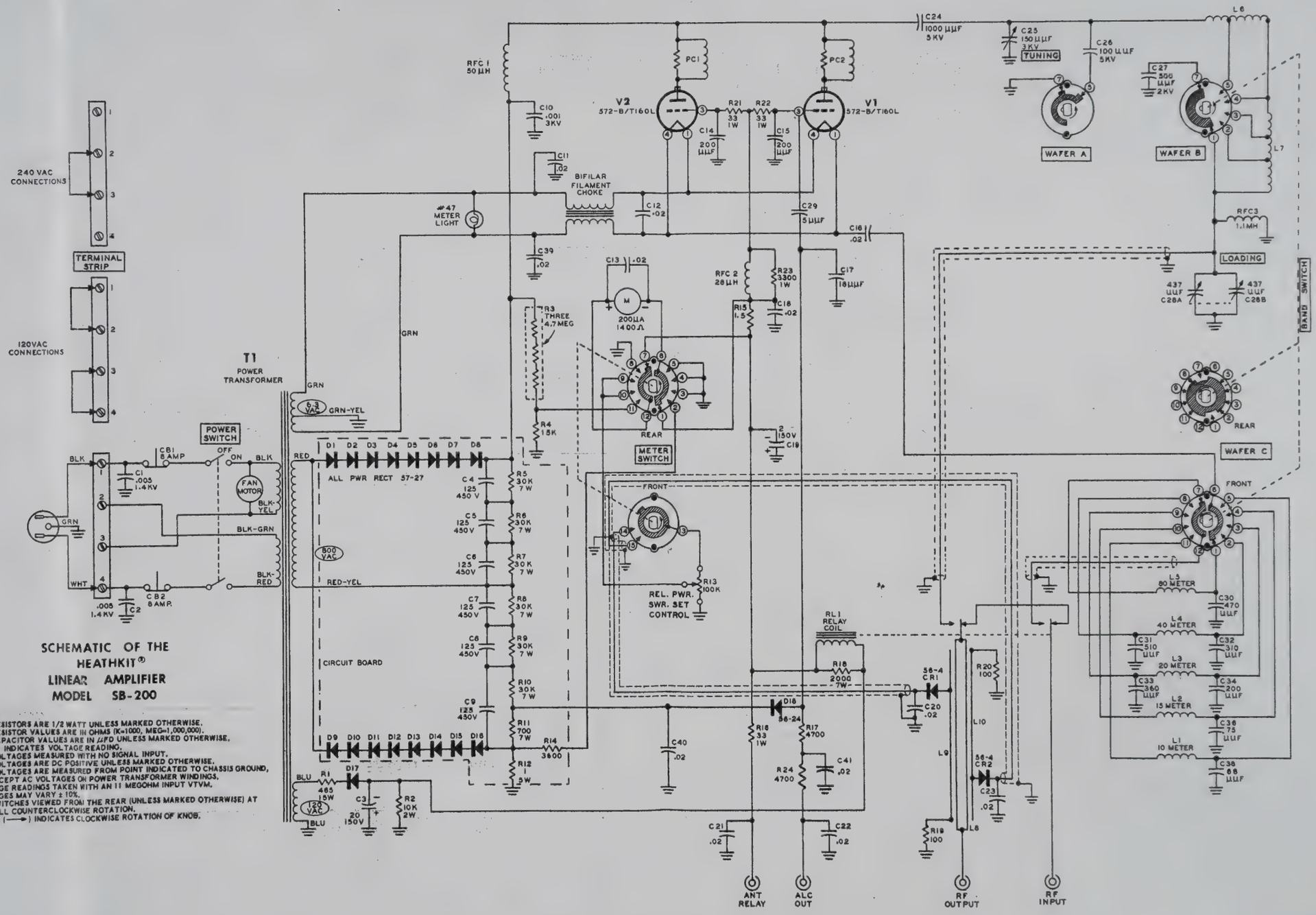

SCHEMATIC OF THE
HEATHKIT®
LINEAR AMPLIFIER
MODEL SB-200

NOTES:
ALL RESISTORS ARE 1/2 WATT UNLESS MARKED OTHERWISE.
ALL RESISTOR VALUES ARE IN OHMS (K=1000, MEG=1,000,000).
ALL CAPACITOR VALUES ARE IN µµFD UNLESS MARKED OTHERWISE.
(oval) INDICATES VOLTAGE READING.
ALL VOLTAGES MEASURED WITH NO SIGNAL INPUT.
ALL VOLTAGES ARE DC POSITIVE UNLESS MARKED OTHERWISE.
ALL VOLTAGES ARE MEASURED FROM POINT INDICATED TO CHASSIS GROUND, EXCEPT AC VOLTAGES ON POWER TRANSFORMER WINDINGS.
VOLTAGE READINGS TAKEN WITH AN 11 MEGOHM INPUT VTVM.
VOLTAGES MAY VARY ± 10%.
ALL SWITCHES VIEWED FROM THE REAR (UNLESS MARKED OTHERWISE) AT FULL COUNTERCLOCKWISE ROTATION.
ARROW (⟶) INDICATES CLOCKWISE ROTATION OF KNOB.

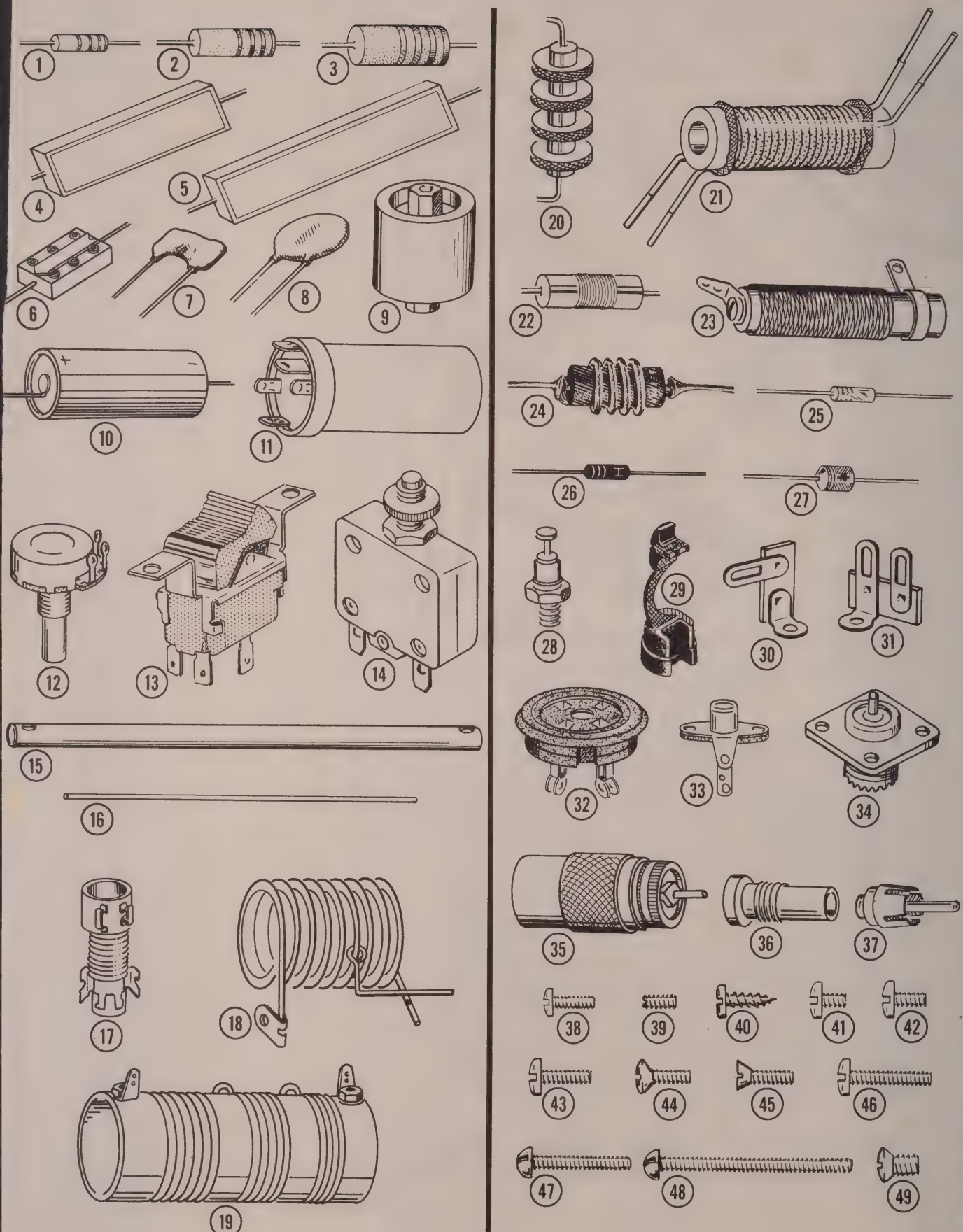
1
2
3
4
5
6
7
8
9
10
11
12
13
14
15
16
17
18
19
20
21
22
23
24
25
26
27
28
29
30
31
32
33
34
35
36
37
38
39
40
41
42
43
44
45
46
47
48
49

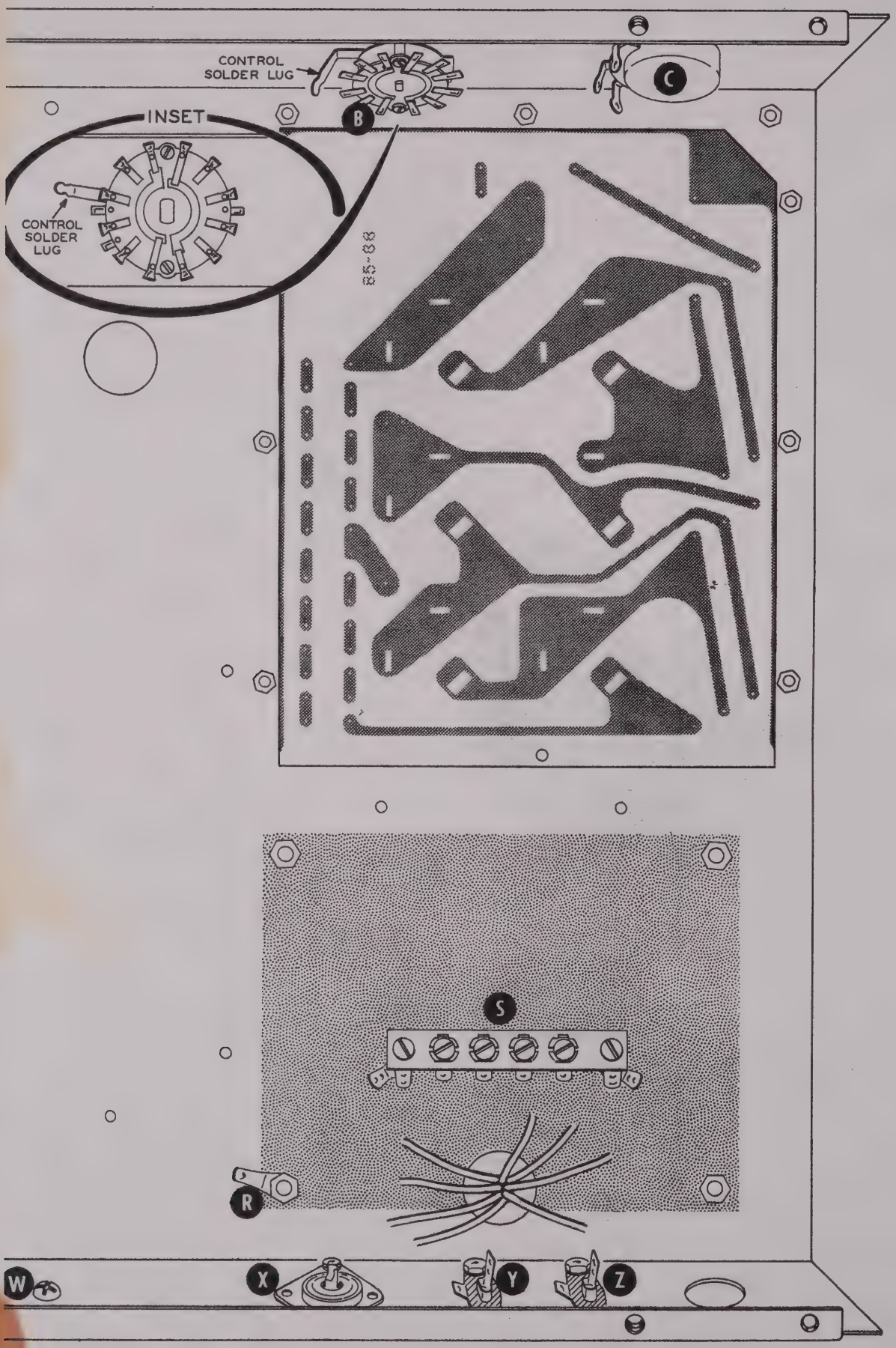

PICTORIAL 2

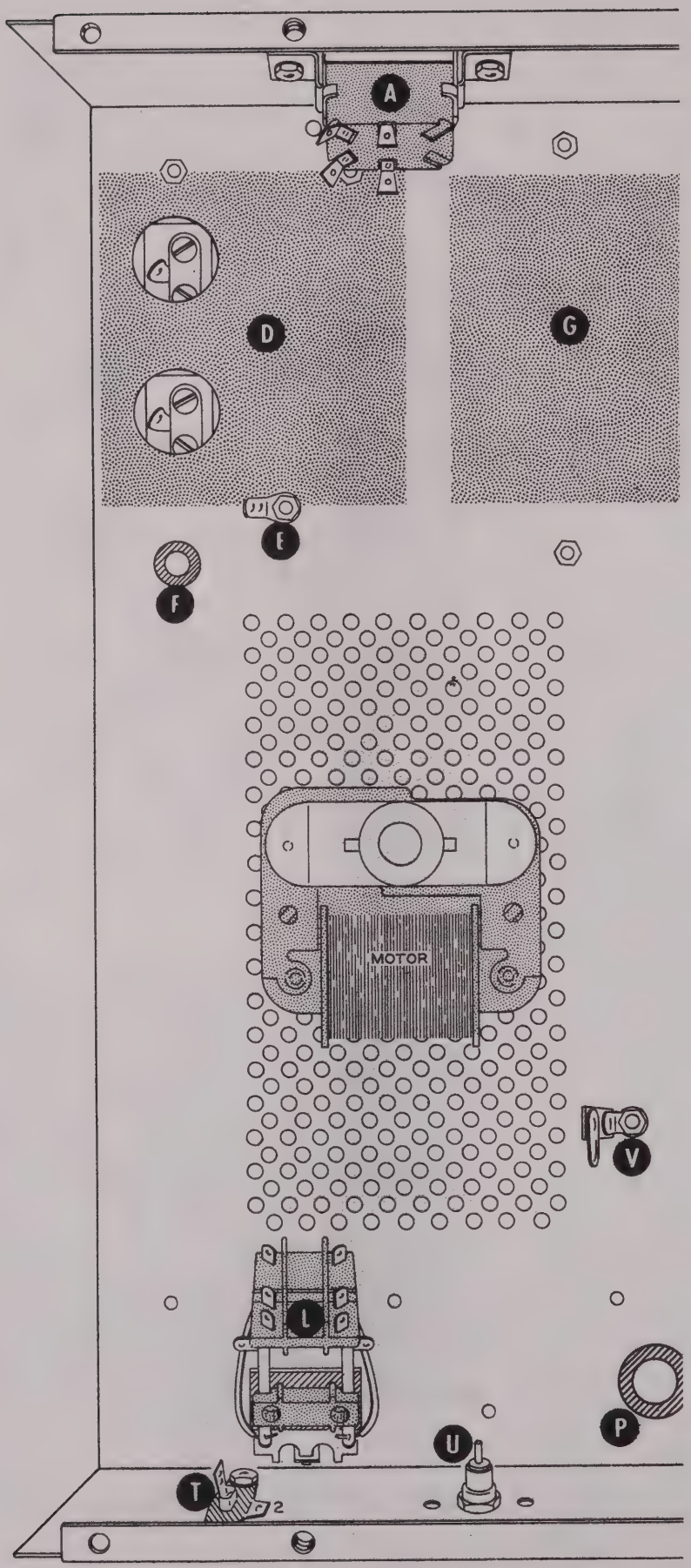
A
D
G
E
F
MOTOR
V
L
P
U
T
2

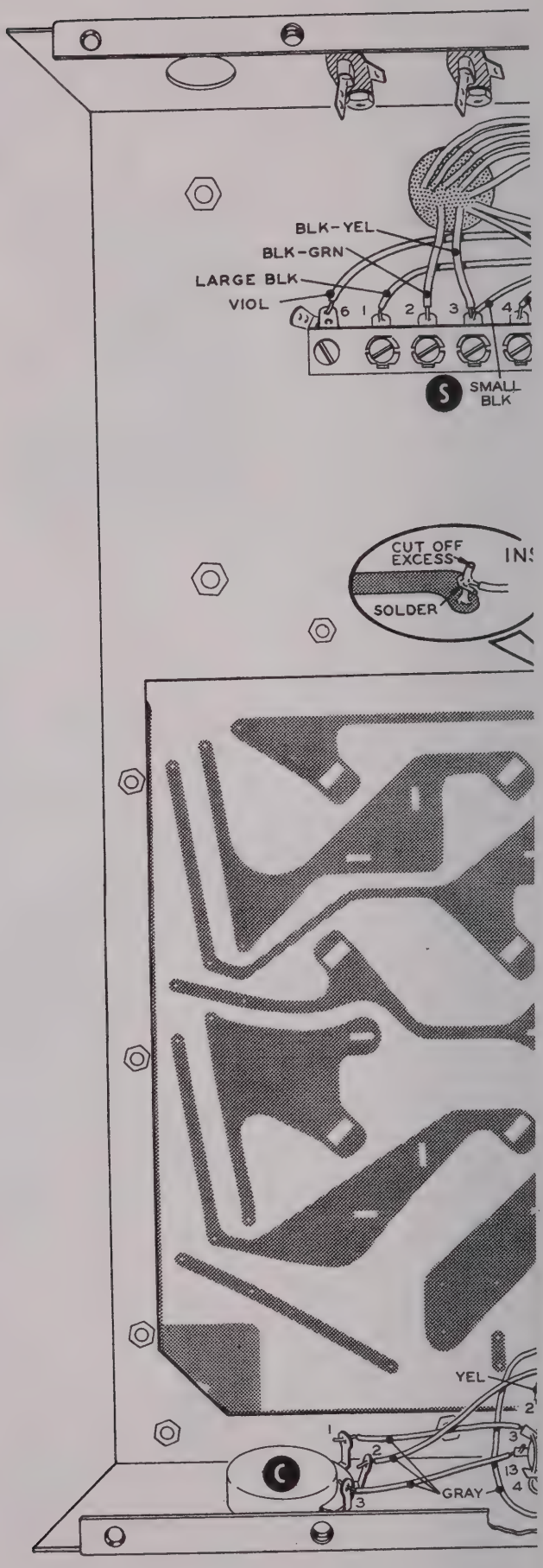
BLK-YEL
BLK-GRN
LARGE BLK
VIOL
6 1 2 3 4
S
SMALL BLK
CUT OFF EXCESS
SOLDER
YEL
GRAY
C

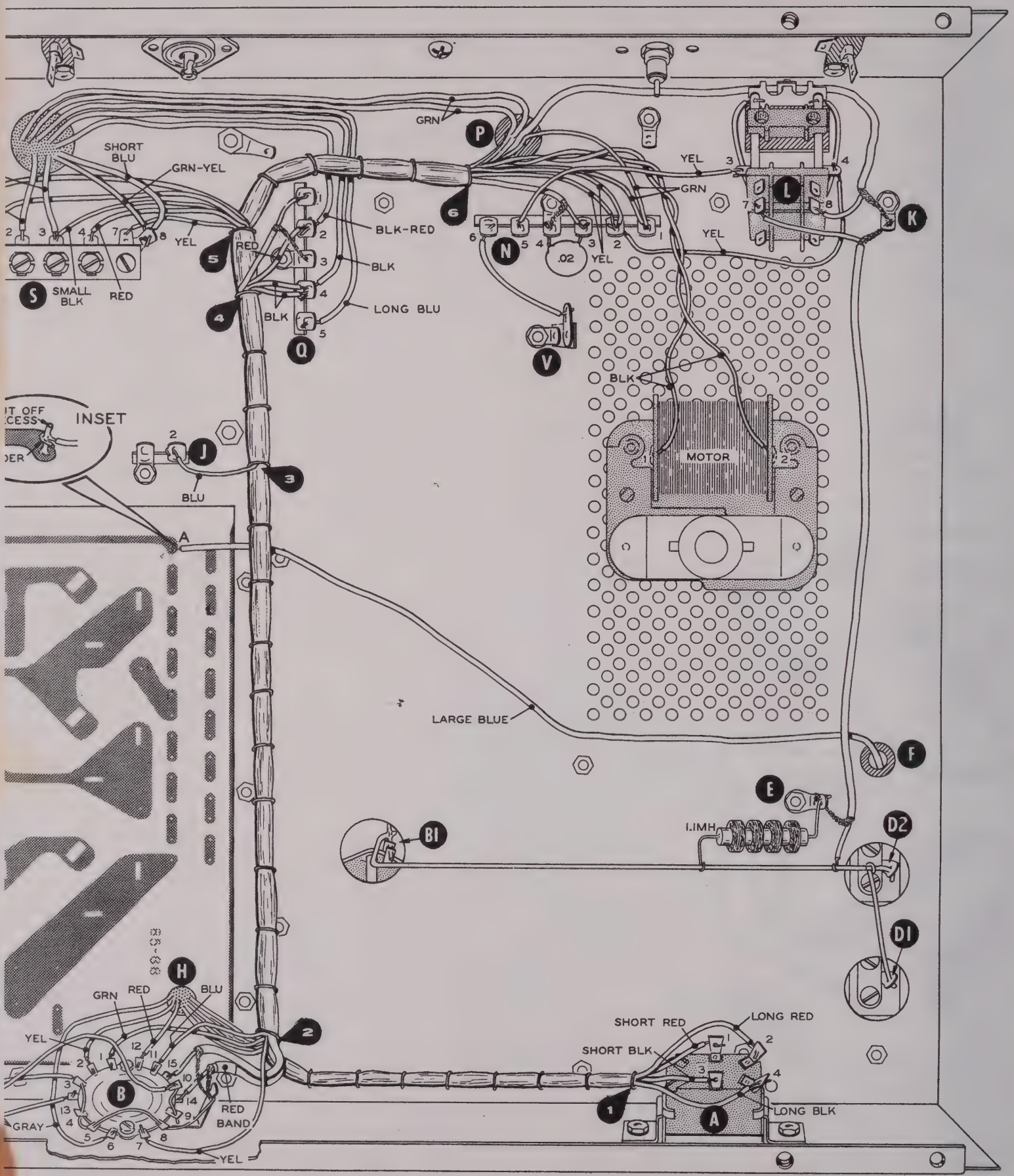

GRN
P
SHORT BLU
GRN-YEL
YEL
GRN
L
K
BLK-RED
RED
BLK
LONG BLU
BLK
S
SMALL BLK
RED
N
.02
YEL
V
BLK
MOTOR
INSET
J
BLU
A
LARGE BLUE
F
E
B1
1.1MH
D2
D1
H
GRN
RED
BLU
YEL
B
RED BAND
GRAY
YEL
SHORT RED
LONG RED
SHORT BLK
LONG BLK
A

PICTORIAL 6

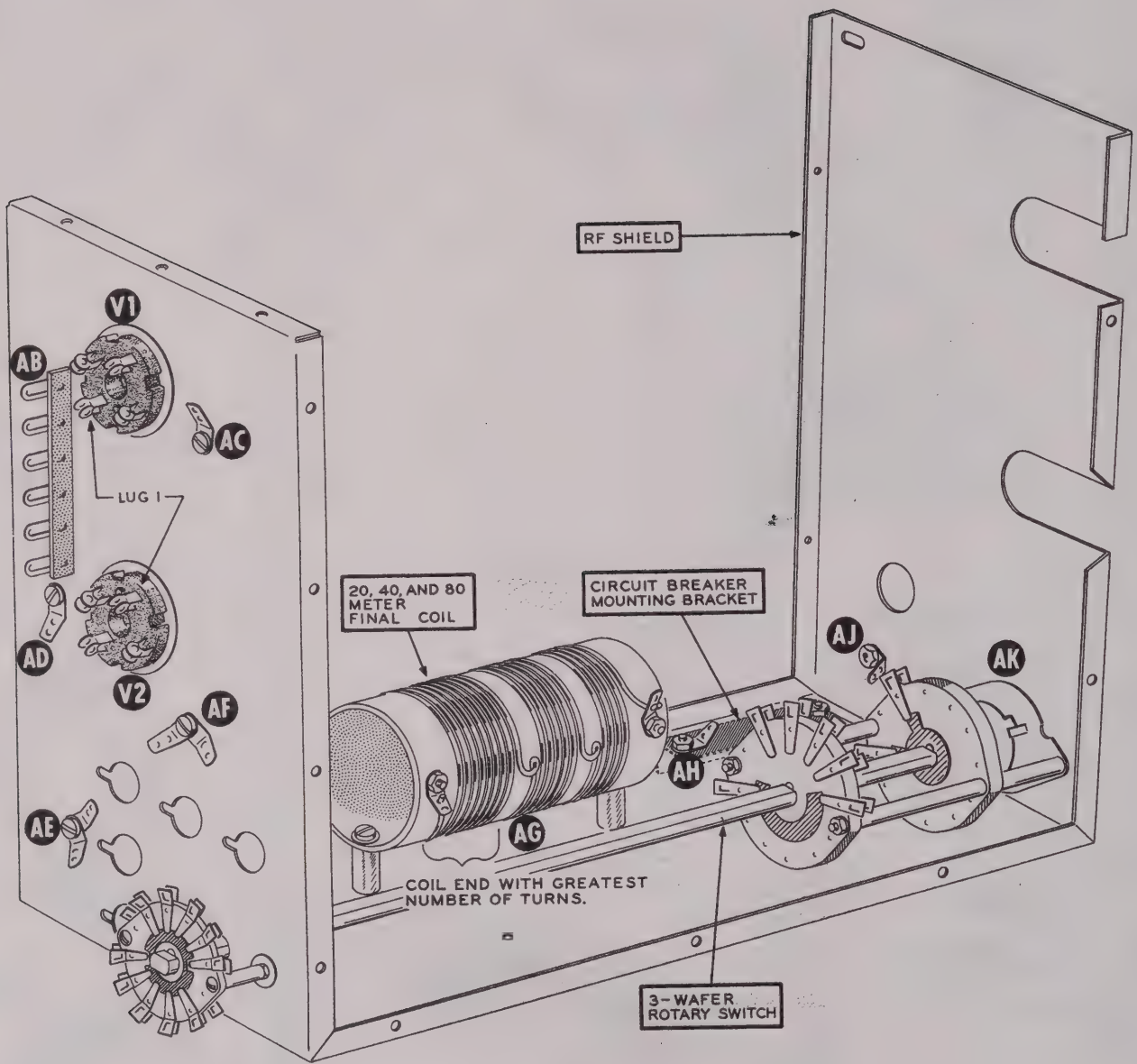
RF SHIELD
V1
AB
AC
LUG 1
AD
V2
AF
AE
20, 40, AND 80 METER FINAL COIL
CIRCUIT BREAKER MOUNTING BRACKET
AJ
AK
AH
AG
COIL END WITH GREATEST NUMBER OF TURNS.
3-WAFER ROTARY SWITCH

PICTORIAL 3

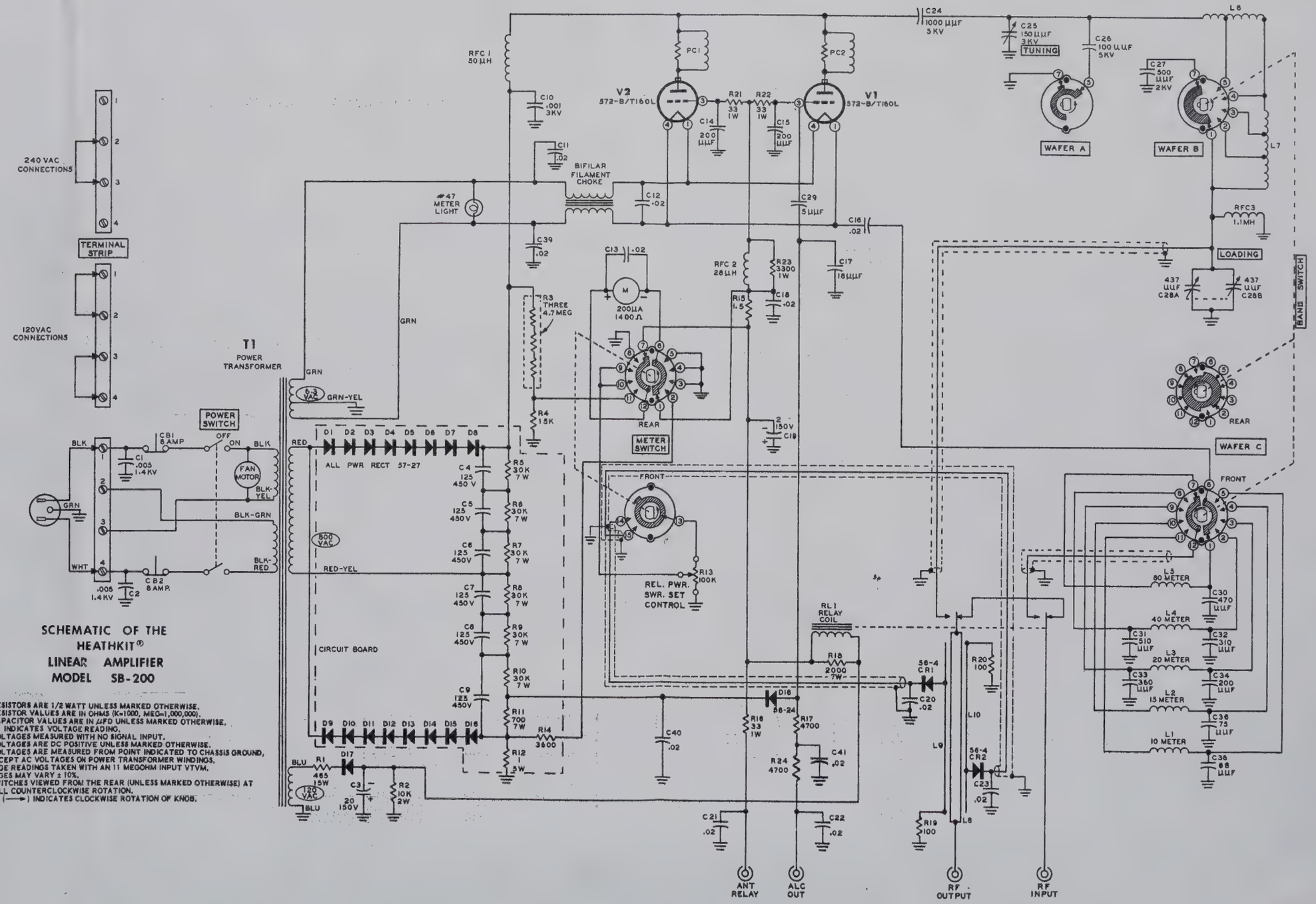

SCHEMATIC OF THE HEATHKIT® LINEAR AMPLIFIER MODEL SB-200

NOTES:
ALL RESISTORS ARE 1/2 WATT UNLESS MARKED OTHERWISE.
ALL RESISTOR VALUES ARE IN OHMS (K=1000, MEG=1,000,000).
ALL CAPACITOR VALUES ARE IN µµFD UNLESS MARKED OTHERWISE.
( ) INDICATES VOLTAGE READING.
ALL VOLTAGES MEASURED WITH NO SIGNAL INPUT.
ALL VOLTAGES ARE DC POSITIVE UNLESS MARKED OTHERWISE.
ALL VOLTAGES ARE MEASURED FROM POINT INDICATED TO CHASSIS GROUND, EXCEPT AC VOLTAGES ON POWER TRANSFORMER WINDINGS.
VOLTAGE READINGS TAKEN WITH AN 11 MEGOHM INPUT VTVM.
VOLTAGES MAY VARY ± 10%.
ALL SWITCHES VIEWED FROM THE REAR (UNLESS MARKED OTHERWISE) AT FULL COUNTERCLOCKWISE ROTATION.
ARROW (⟶) INDICATES CLOCKWISE ROTATION OF KNOB.

PRICE $2.00

CONDENSED

HEATHKIT®
ASSEMBLY MANUAL

HEATHKIT

LINEAR AMPLIFIER

MODEL SB-200

595-682-04

Copyright © 1964
Heath Company
All rights reserved

Assembly
and
Operation
of the

HEATHKIT

LINEAR AMPLIFIER

MODEL SB-200

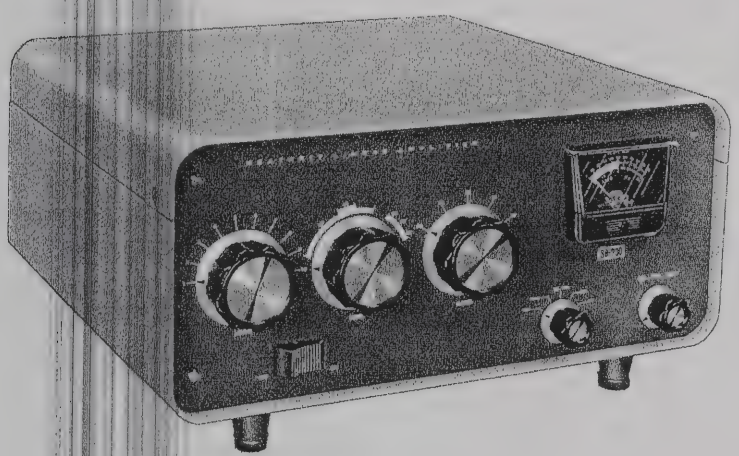

TABLE OF CONTENTS

Specifications 4

Introduction 5

Circuit Description 5

Construction Notes 7

Parts List 8

Proper Soldering Techniques 10

Circuit Board Wiring And Soldering 12

Step-By-Step Procedure 13

Step-By-Step Assembly

- Circuit Board Assembly 14
- Parts Mounting Chassis 15
- Parts Mounting - RF Shield 19
- Wiring RF Shield 22
- Wiring-Chassis Bottom 25
- Wiring-SWR Bridge 30
- Wiring-Chassis Top 32
- Final Wiring 36

Initial Test 42

Final Assembly 42

Installation 43

Operation 47

In Case Of Difficulty 50

Factory Repair Service 51

Schematic . . . . (fold-out from page) 51

Replacement Parts Price List
(fold-out from page) 52

HEATH COMPANY
BENTON HARBOR, MICHIGAN 49022

HEATHKIT

SPECIFICATIONS

Band Coverage	80, 40, 20, 15, and 10 meters.
Maximum Power Input	SSB: 1200 watts P.E.P. CW: 1000 watts.
Driving Power Required	100 watts.
Duty Cycle	SSB: continuous voice modulation. CW: 50% (key down time not to exceed 5 minutes).
Third Order Distortion	-30 db or better at 1000 watts P.E.P.
Output Impedance	50 to 75 Ω unbalanced; variable pi-output circuit. SWR not to exceed 2:1.
Input Impedance	52 Ω unbalanced; broad-band pretuned input circuit requires no tuning.
Meter Functions	0-100 ma grid current (white area). 0-1000 ma plate current. 0-1000 relative power. 1:1 to 3:1 SWR. 1500-3000 volts high voltage.
Front Panel Controls	LOAD: 1 to 10. TUNE: 80, 40, 20, 15, and 10 meters. BAND: 80, 40, 20, 15, and 10 meters. RELative Power SENSitivity. Meter Switch: GRID, PLATE, REL PWR, SWR, and HV. Power Switch: OFF, ON.
Tube Complement	Two 572-B (or two T-160-L) in parallel.
Power Requirements	120 volts AC at 16 amperes (maximum). 240 volts AC at 8 amperes (maximum).
Cabinet Size	14-7/8" wide x 6-5/8" high x 13-3/8" deep.
Net Weight	35 lbs.

The Heath Company reserves the right to discontinue instruments and to change specifications at any time without incurring any obligation to incorporate new features in instruments previously sold.

INTRODUCTION

With the increasing popularity of single sideband, suppressed-carrier phone transmission as a mode of amateur radio communication, more Amateurs are finding it possible to run higher transmitter power inputs than they could previously afford with conventional AM equipment. Since high-level modulating equipment is not necessary in single-sideband service, the cost of converting to high power is considerably reduced.

In keeping with this trend toward higher power in single-sideband service, the Heathkit Model SB-200 Linear Amplifier was designed to provide high power capability and complete versatility. Nearly any of the popular SSB and CW exciters available today can be used as a driver for this Amplifier.

The amplifier RF compartment is completely enclosed by perforated aluminum shielding. This type of construction increases stability and greatly decreases radiation that could cause TVI. The Amplifier is forced-air cooled to prolong tube life.

CIRCUIT DESCRIPTION

POWER SUPPLY

The power supply uses a power transformer which has dual-primary and triple-secondary windings. The primary winding may be connected for either 120 or 240 volt AC operation. The blower fan is connected across one-half of the primary winding. The transformer is protected against overload by reset type circuit breakers CB1 and CB2.

One secondary winding of the power transformer supplies 6.3 volts AC for the tube filaments and the pilot lamp in the meter. Another secondary winding is used with silicon diodes D1 through D16 and electrolytic capacitors C4 through C9 in a full-wave voltage-doubler circuit to provide plate voltage for the tubes. Resistors R5 through R10 insure that the voltage across each of the electrolytic capacitors is equalized; these resistors also serve as a bleeder network.

Resistor R11 at the bottom of the bleeder network provides an ALC threshold voltage of approximately 10 volts DC. Resistor R12 provides a means of measuring plate current independently, without also measuring bleeder current.

The third secondary winding, with resistors R1 and R2, capacitor C3, and silicon diode D17 forms a half-wave rectifier circuit. This circuit provides antenna relay control voltage and cut-off bias voltage for the grids of the amplifier tubes.

INPUT CIRCUIT

Tubes V1 and V2 are connected in parallel in a cathode-driven (grounded grid), class B configuration. Driving power for each band is coupled through a broad-band network, consisting of a coil and associated capacitors, and through capacitor C16 to the cathodes of tubes V1 and V2. Coils L1 through L5 with their associated capacitors are used to make up these impedance-matching networks, which reduce distortion and increase efficiency.

The correct input network, as well as the correct output circuit coil tap, for each band is selected with the Band switch. (The coils in the input networks are factory aligned and require no further adjustment.)

To keep the capacitance of the transformer filament winding from shunting the RF driving power to ground, the filament winding is isolated from the cathode circuit by a bifilar-wound filament choke. Also, this choke provides a cathode current path to ground.

OUTPUT CIRCUIT

High voltage is applied to the plates of tubes V1 and V2 through RF choke RFC1 and parasitic chokes PC1 and PC2. Tuning capacitor C25 is connected on the input side of tapped final coils L6 and L7. C26 is switched in parallel with the Tuning capacitor on the 80 meter band.

Loading capacitors C28A and C28B are on the output side of final coils L6 and L7. Capacitor C27 is switched in parallel with the Loading capacitor on the 80 meter band. Output power is applied through antenna change-over relay RL1 and through the SWR (standing wave ratio) bridge circuit to the RF Output connector. The SWR bridge consists of L8, L9, and L10, capacitors C20 and C23, resistors R19 and R20, and crystal diodes CR1 and CR2.

ANTENNA CHANGE-OVER AND CUTOFF BIAS CIRCUITS

Antenna change-over relay RL1 is controlled by a VOX (voice operated transmitter) relay in the exciter used with the Linear Amplifier. The relay in the exciter is connected to the Antenna Relay jack of the Linear Amplifier. When transmitting, the VOX relay grounds the Antenna Relay; when receiving, the Antenna Relay is ungrounded.

While receiving, cut-off bias voltage from the power supply bias circuit is applied through the coil of relay RL1, and through resistor R15 and choke RFC2, to the grids of tubes V1 and V2. The Antenna Relay jack is ungrounded and no current will flow through the coil of relay RL1, which allows the relay to remain open. Thus it connects the RF Output jack (antenna) to the RF Input jack of the Linear Amplifier.

When transmitting, the Antenna Relay jack is grounded by the VOX relay of the exciter. This allows current to flow through the coil of relay RL1 and actuate the relay. When actuated, relay RL1 connects the RF Output jack (antenna) to the output circuit of the Linear Amplifier. Grounding the Antenna Relay jack also grounds the grids of tubes V1 and V2 through RFC2, and resistors R15 and R16. This removes all but -2 volts from the grids of the tubes. This -2 volts is operating bias, which limits resting plate current to approximately 90 milliamperes.

When operating with the Linear Amplifier turned OFF, there is no bias voltage to operate relay RL1 and the RF Input jack remains connected to the antenna, through RF Output jack. This permits low power operation directly from the exciter into the antenna without changing any cables. Because silicon rectifiers and instant-heating-filament tubes are used in the Linear Amplifier, you can go to high power operation as soon as the Linear Amplifier is turned ON.

METERING CIRCUITS

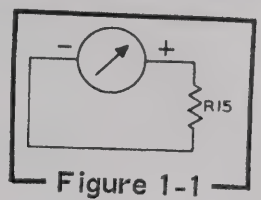

Figure 1-1

GRID - Figure 1-1

In the Grid position of the meter switch, the meter is connected to measure the voltage across grid resistor R15. The voltage across this resistor is directly proportional to the grid current which flows through it; therefore, the meter will indicate grid current. Since grid current in tubes V1 and V2 should not exceed 100 ma, only half (white area) of the 0-200 ma meter scale is used for this measurement.

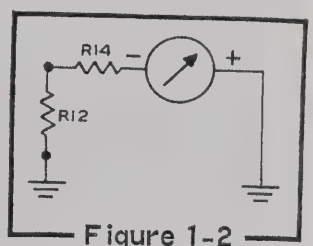

Figure 1-2

PLATE - Figure 1-2

Plate current is read on the top scale of the meter. This scale is divided into 20 ma divisions from 0 to 1000 ma. Plate current readings are obtained by measuring the voltage across resistor R12, through series resistor R14.

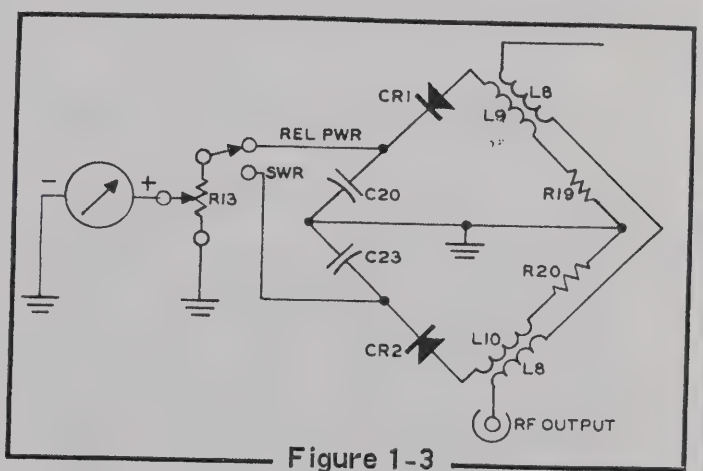

Figure 1-3

REL PWR And SWR - Figure 1-3

Relative Power and Standing Wave Ratio are measured with a bridge circuit, consisting of coils L8, L9, and L10, diodes CR1 and CR2, resistors R19 and R20, and capacitors C20 and

C23. Relative Power Sensitivity control R13 sets the sensitivity of the meter. The REL PWR position is used when adjusting the TUNE and LOAD controls for maximum output of the Linear Amplifier; this meter function is also used to establish a "set" meter level for making SWR measurements.

Because coil L8 of the bridge circuit is connected in series between the RF Input and RF Output jacks when the Linear Amplifier is turned OFF, the meter can be used to measure REL PWR and SWR when operating the exciter alone. This method of checking SWR is recommended for accurately determining antenna performance.

In the bridge circuit, RF current is inductively and capacitively coupled from L8, to L9 and L10. The RF currents in L9 and L10 are rectified by diodes CR1 and CR2, and then filtered by capacitors C20 and C23.

For REL PWR measurements, the rectified RF voltage from L9 is applied to the meter. For SWR (reflected power) measurements, the rectified RF voltage from L10 is applied to the meter.

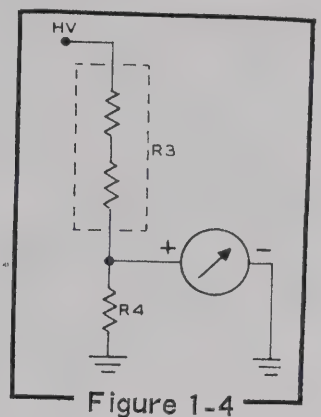

Figure 1-4

HV - Figure 1-4

High Voltage is measured with a voltage divider network consisting of resistors R3 and R4. The voltage across resistor R4 is applied to the meter. High voltage is read on the lower right-hand meter scale (1500 to 3000).

CONSTRUCTION NOTES

This manual is supplied to assist you in every way to complete your kit with the least possible chance for error. The arrangement shown is the result of extensive experimentation and trial. If followed carefully, the result will be highly stable and dependable performance. We suggest that you retain the manual in your files for future reference, both in the use of the equipment and for its maintenance.

UNPACK THE KIT CAREFULLY AND CHECK EACH PART AGAINST THE PARTS LIST. In so doing, you will become acquainted with the parts. Refer to the information on the inside covers of the manual to help you identify the components. If some shortage or parts damage is found in checking the Parts List, please read the Replacements section and supply the information called for therein.

Resistors generally have a tolerance rating of 10% unless otherwise stated in the Parts List. Tolerances on capacitors are generally even greater. Limits of +100% and -20% are common for electrolytic capacitors.

We suggest that you do the following before work is started:

1. Lay out all parts so that they are readily available.
2. Provide yourself with good quality tools. Basic tool requirements consist of a screwdriver with a 1/4" blade; a small screwdriver with a 1/8" blade; phillips screwdriver; long-nose pliers; wire cutters, preferably separate diagonal cutters; a penknife or a tool for stripping insulation from wires; a soldering iron (or gun) and rosin core solder. A set of nut drivers and a nut starter, while not necessary, will aid extensively in construction of the kit.

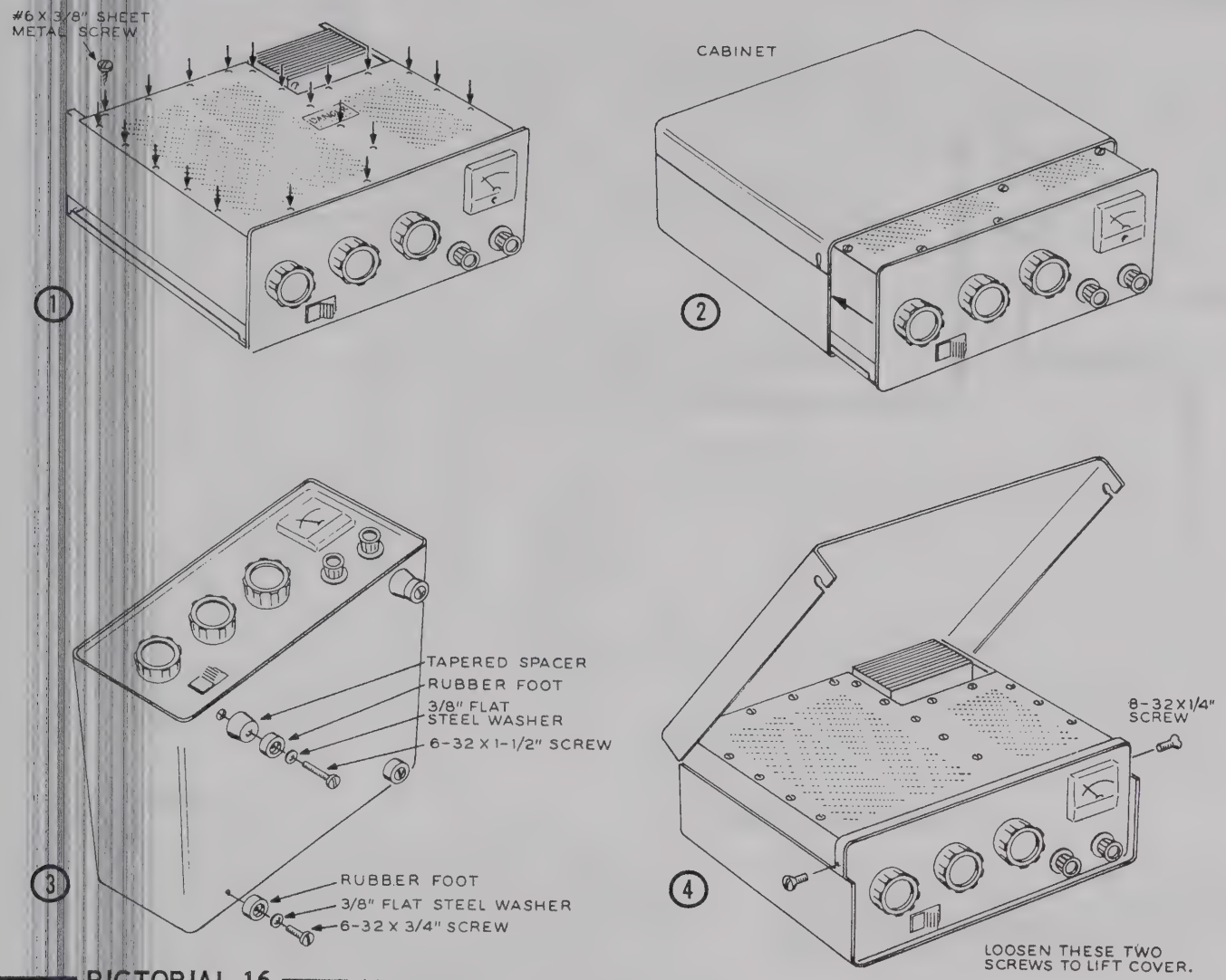

PICTORIAL 16

INSTALLATION

LOCATION

Although the Linear Amplifier has a built-in fan for cooling purposes, avoid excessively warm locations such as those near radiators and heating vents. The unit should be placed in a location that provides adequate space around it, permitting free air circulation through the cabinet openings.

POWER SOURCE

The Linear Amplifier is designed to operate from either a 120 volt or 240 volt AC, 60 cps power source, depending on the jumper installation on terminal strip S. The AC power outlet used should be properly fused and fed with not smaller than #14 wire.

EXCITER

The Linear Amplifier can be driven by most commercial or home-built exciters with a power output of approximately 100 watts. The Heathkit SB-400 or SB-401 Transmitter or the SB-100 or SB-101 Transceiver is ideal for use with this Linear Amplifier.

Exciters in the 40 to 60 watt output class will not drive the Linear Amplifier to a full kilowatt, however, the Linear Amplifier will operate quite efficiently at lower power levels.

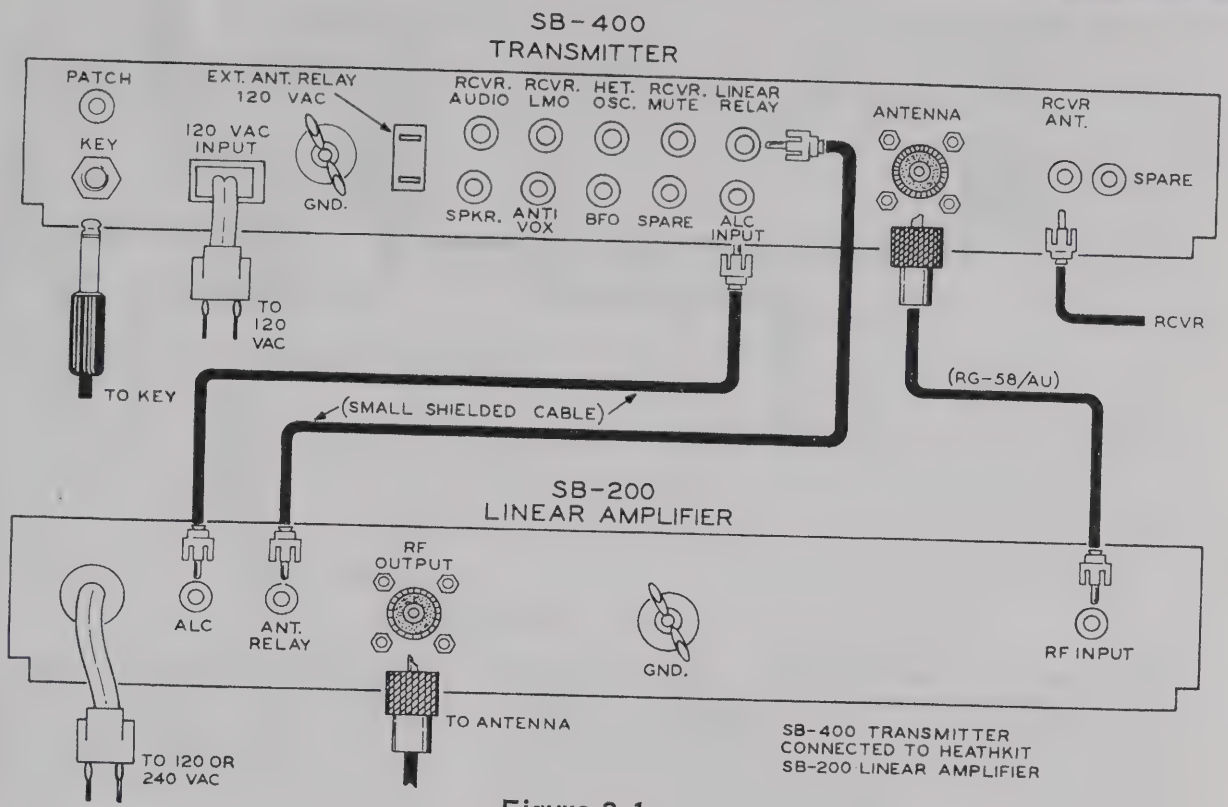

Figure 2-1

ANTENNA

The pi-network output is designed to work into a 50 to 75 Ω transmission line. Most commercial and home-built antennas are designed to be fed with 50 or 72 Ω coax. RG-8/U or RG-11/U coaxial cable is recommended for the transmission line, and every effort should be made to get the SWR of the antenna down to less than 2 to 1.

SWR MEASUREMENTS

( ) Connect the amplifier to the exciter and the antenna. Do not turn the Linear Amplifier ON, thus permitting the exciter to feed through the Linear Amplifier to the antenna.

( ) Place the Linear Amplifier Meter switch in the REL PWR position.

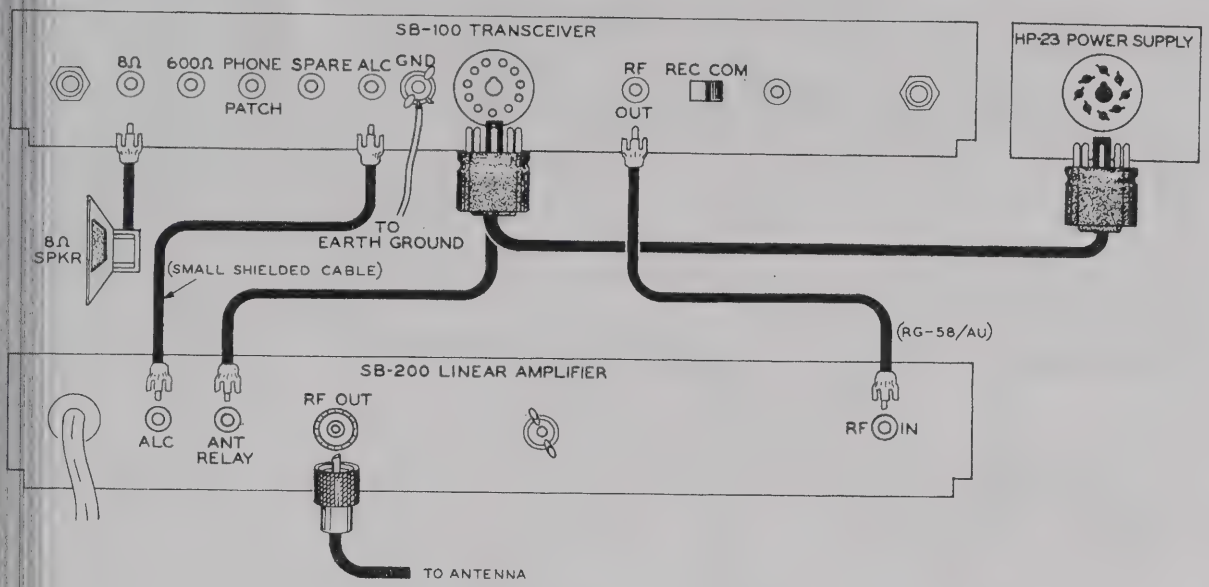

Figure 2-2

( ) Load the exciter to full output. The meter of the Linear Amplifier may be used for this purpose, as it will function in both the REL PWR and SWR positions without the Linear Amplifier being turned ON.

( ) Adjust the REL PWR SENS control of the Linear Amplifier for a SET (full-scale) indication on the meter.

( ) Turn the meter switch to SWR and read the standing wave ratio directly from the meter (1 to 3 scale).

NOTE: SWR checks can also be made with the Linear Amplifier operating at full power (1000 watts); however, due to the nonlinear characteristics of crystal diodes in the SWR circuit, the most accurate SWR readings are obtained at low power (70 to 100 watt) levels using only the exciter. If the exciter alone will not give full scale relative power readings, the Linear Amplifier may be used, however, limit the drive from the exciter to no more than necessary.

Figure 2-1 shows the Linear Amplifier connected to the Heathkit Model SB-400 Transmitter. Other transmitters or exciters would be connected to the Linear Amplifier in a similar manner.

The Heathkit Model SB-100 Transceiver can be connected to the Linear Amplifier as shown in Figure 2-2.

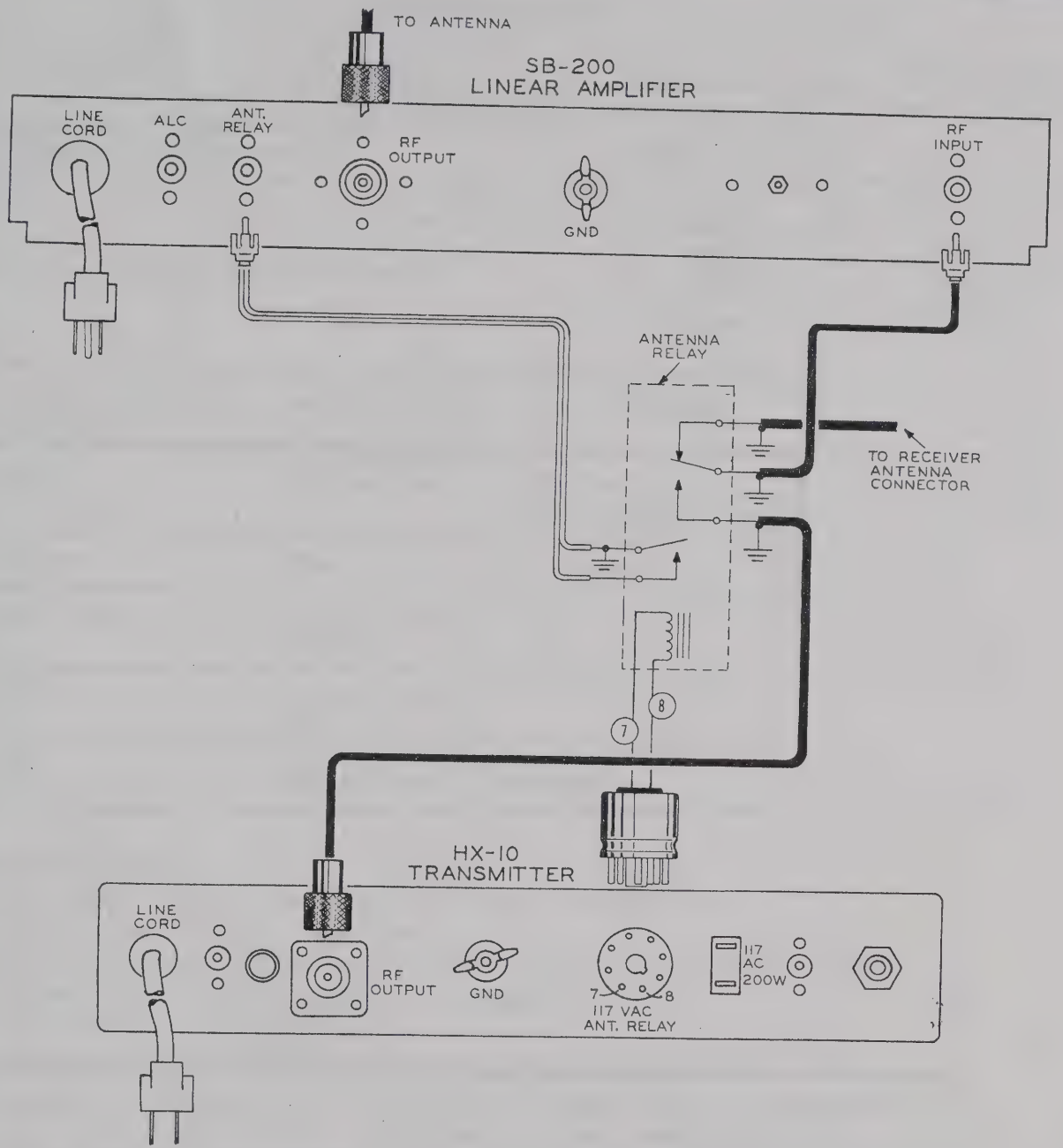

Figure 2-3

Observe in Figure 2-3 that an external antenna relay with extra contacts is necessary to obtain proper antenna switching, when connecting the Linear Amplifier to the Heathkit Model HX-10 Transmitter, and other transmitters not having a built-in antenna relay.

NOTE: The ANT RELAY jack of the Linear Amplifier must be grounded by the exciter to place the Linear Amplifier into operation. (See the Circuit Description.) This grounding is accomplished by the VOX relay or a transmit-receive switch in the exciter.

OPERATION

METER READINGS

Refer to Figure 2-4 and study the meter scale; note how it indicates for the various positions of the Meter switch.

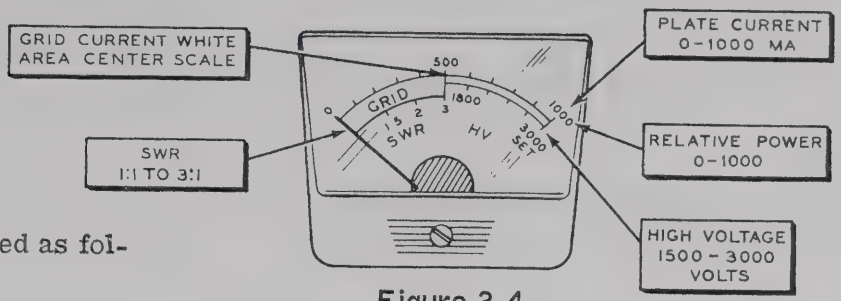

Figure 2-4

The meter scales should be interpreted as follows:

METER SWITCH POSITION	MEASURES	SCALE READING
GRID	Grid current	GRID (white area represents 0-100 ma)
PLATE	Plate current	0-1000 ma
REL PWR	Relative power output	0-1000
SWR	Standing wave ratio	1:1 to 3:1
HV	High voltage	1500-3000

OPERATING PROCEDURE

Make sure the Linear Amplifier is connected to your exciter properly.

( ) Set all switches and controls as follows:

SWITCH OR CONTROL	SWITCH OR CONTROL POSITION	COMMENTS
OFF-ON	OFF	Linear amplifier line cord connected to proper power source.
LOAD	4	Note desired position for antenna used and preset next time.
BAND	80 meters	Or desired band.
TUNE	80 meter segment	Or desired band segment.
METER	REL PWR	
REL PWR SENS	FULLY CLOCKWISE	Adjust to keep meter pointer on scale.

( ) Adjust the exciter for full CW output at the desired frequency. NOTE: With the Linear Amplifier turned OFF, the exciter output is fed through the Linear Amplifier to the RF OUTPUT jack. Also, the REL PWR and SWR functions of the Meter may be used to aid in tuning the exciter.

( ) Reduce the drive level of the exciter to a minimum.

( ) Place the Meter switch of the Linear Amplifier in the PLATE position and push the OFF-ON switch to ON. With no driver output from the exciter, the Linear Amplifier meter should show idling plate current of approximately 90 ma.

( ) Advance the drive level of the exciter for a 200 ma plate current indication on the meter of the Linear Amplifier.

( ) Quickly switch the Linear Amplifier Meter switch to REL PWR. If necessary, reduce the REL PWR SENS control setting to keep the meter pointer within the scale.

( ) Adjust the TUNE and LOAD controls for a maximum REL PWR meter indication.

( ) Increase the drive level from the exciter to full output.

( ) Again, adjust the TUNE and LOAD controls for a maximum REL PWR meter indication.

( ) Check the GRID and PLATE meter readings. If the grid reading is greater than midscale, reduce the drive level of the exciter to bring grid current within the GRID range of the meter. If the plate current reading is higher than 500 ma, reduce loading by turning the LOAD control counterclockwise.

This procedure of tuning the Linear Amplifier should take only a few seconds, after you go through it a few times. Note the LOAD control position so it can be preset next time a particular band is used.

The Linear Amplifier is now loaded for operation at maximum input power. If an oscilloscope is being used for monitoring, a display similar to that shown in Figure 2-5 should be obtained.

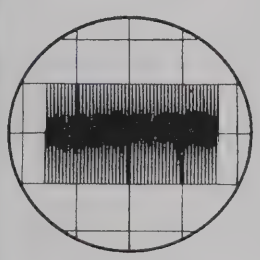

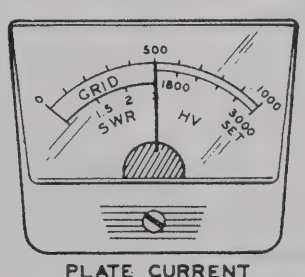

Oscilloscope pattern and plate meter reading resulting from carrier or "single tone" modulation. The meter indicates maximum or CW power input.

Figure 2-5

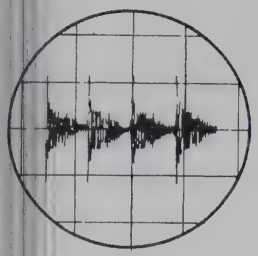

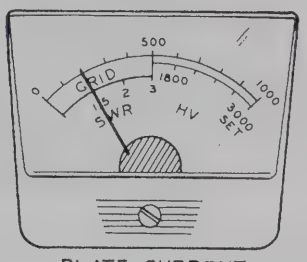

Oscilloscope pattern and plate meter reading resulting from voice modulation. Notice the peaks on the oscilloscope pattern. They are sharp, indicating a clean signal, and they will attain a height slightly greater than the "single tone" pattern of Figure 2-5, indicating maximum power input. NOTE: Plate current peak reading is approximately 1/2 or less of maximum "single tone" reading due to meter inertia and voice characteristics.

Figure 2-6

Turn the exciter to standby to remove drive from the Linear Amplifier.

The Linear Amplifier is now ready for SSB or CW transmission. An example of a proper oscilloscope pattern is shown in Figure 2-6. Note that there are sharp distinct peaks. The number of patterns or "christmas trees" will depend on the individual voice and the scope sweep speed. Set the scope for about a 30 cps sweep.

Note that the meter reading on voice peaks will not be high; however, the height of the oscilloscope pattern is slightly greater than that shown in Figure 2-5. This increase in peak power is due to dynamic characteristics of the power supply and allows the Linear Amplifier to develop approximately 20% greater peak envelope power for a given level of CW input. The meter will indicate only one-half or less of the single tone level, depending on the individual's voice, before "flat topping" occurs.

Figure 2-7 shows the same voice pattern but with extreme "flat topping." The oscilloscope shows that no more useful power is being developed. The meter reads higher, but only distortion is developed.

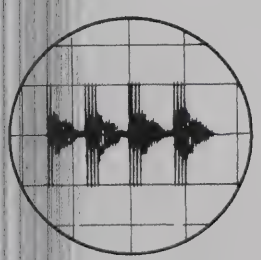

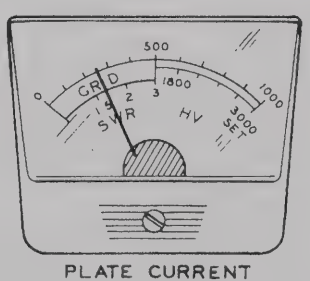

Oscilloscope pattern and plate meter reading resulting from over modulation. The meter reads higher, but the scope indicates peak flattening. Operation in this manner causes distortion and severe interference to adjacent frequencies.

Figure 2-7

IN CASE OF DIFFICULTY

1. Recheck the wiring. Trace each lead in colored pencil on the Pictorial as it is checked. It is frequently helpful to have a friend check your work. Someone who is not familiar with the unit may notice something consistently overlooked by the constructor.

2. It is interesting to note that about 90% of the kits that are returned for repair, do not function properly due to poor connections and soldering. Therefore, many troubles can be eliminated by reheating all connections to make sure that they are soldered as described in the Proper Soldering Techniques section of this manual.

3. Make sure that the tubes light up properly.

4. Check the tubes with a tube tester or by substitution of tubes of the same types and known to be good.

5. Check the values of the parts. Be sure that the proper part has been wired into the circuit, as shown in the Pictorial Diagrams and as called out in the wiring instructions.

6. Check for bits of solder, wire ends or other foreign matter which may be lodged in the wiring.

7. If, after careful checks, the trouble is still not located and a voltmeter is available, check voltage readings against those shown on the Schematic Diagram. NOTE: All voltage readings were taken with an 11 megohm input vacuum tube voltmeter. Voltages may vary as much as 10%.

8. A review of the Circuit Description will prove helpful in indicating where to look for trouble.

NOTE: In an extreme case where you are unable to resolve a difficulty, refer to the Service and Warranty sections of the "Kit Builders Guide", and to the "Factory Repair Service" information on Page 51 of this Manual.

INTRODUCTION

With the increasing popularity of single sideband, suppressed-carrier phone transmission as a mode of amateur radio communication, more Amateurs are finding it possible to run higher transmitter power inputs than they could previously afford with conventional AM equipment. Since high-level modulating equipment is not necessary in single-sideband service, the cost of converting to high power is considerably reduced.

In keeping with this trend toward higher power in single-sideband service, the Heathkit Model SB-200 Linear Amplifier was designed to provide high power capability and complete versatility. Nearly any of the popular SSB and CW exciters available today can be used as a driver for this Amplifier.

The amplifier RF compartment is completely enclosed by perforated aluminum shielding. This type of construction increases stability and greatly decreases radiation that could cause TVI. The Amplifier is forced-air cooled to prolong tube life.

CIRCUIT DESCRIPTION

POWER SUPPLY

The power supply uses a power transformer which has dual-primary and triple-secondary windings. The primary winding may be connected for either 120 or 240 volt AC operation. The blower fan is connected across one-half of the primary winding. The transformer is protected against overload by reset type circuit breakers CB1 and CB2.

One secondary winding of the power transformer supplies 6.3 volts AC for the tube filaments and the pilot lamp in the meter. Another secondary winding is used with silicon diodes D1 through D16 and electrolytic capacitors C4 through C9 in a full-wave voltage-doubler circuit to provide plate voltage for the tubes. Resistors R5 through R10 insure that the voltage across each of the electrolytic capacitors is equalized; these resistors also serve as a bleeder network.

Resistor R11 at the bottom of the bleeder network provides an ALC threshold voltage of approximately 10 volts DC. Resistor R12 provides a means of measuring plate current independently, without also measuring bleeder current.

The third secondary winding, with resistors R1 and R2, capacitor C3, and silicon diode D17 forms a half-wave rectifier circuit. This circuit provides antenna relay control voltage and cut-off bias voltage for the grids of the amplifier tubes.

INPUT CIRCUIT

Tubes V1 and V2 are connected in parallel in a cathode-driven (grounded grid), class B configuration. Driving power for each band is coupled through a broad-band network, consisting of a coil and associated capacitors, and through capacitor C16 to the cathodes of tubes V1 and V2. Coils L1 through L5 with their associated capacitors are used to make up these impedance-matching networks, which reduce distortion and increase efficiency.

The correct input network, as well as the correct output circuit coil tap, for each band is selected with the Band switch. (The coils in the input networks are factory aligned and require no further adjustment.)

To keep the capacitance of the transformer filament winding from shunting the RF driving power to ground, the filament winding is isolated from the cathode circuit by a bifilar-wound filament choke. Also, this choke provides a cathode current path to ground.

OUTPUT CIRCUIT

High voltage is applied to the plates of tubes V1 and V2 through RF choke RFC1 and parasitic chokes PC1 and PC2. Tuning capacitor C25 is connected on the input side of tapped final coils L6 and L7. C26 is switched in parallel with the Tuning capacitor on the 80 meter band.

SB-200 SPECIFICATIONS

Band Coverage	80, 40, 20, 15, and 10 meters.
Maximum Power Input	SSB: 1200 watts P.E.P. CW: 1000 watts.
Driving Power Required	100 watts.
Duty Cycle	SSB: continuous voice modulation. CW: 50% (key down time not to exceed 5 minutes).
Third Order Distortion	-30 db or better at 1000 watts P.E.P.
Output Impedance	50 to 75 Ω unbalanced; variable pi-output circuit. SWR not to exceed 2:1.
Input Impedance	52 Ω unbalanced; broad-band pretuned input circuit requires no tuning.
Meter Functions	0-100 ma grid current (white area). 0-1000 ma plate current. 0-1000 relative power. 1:1 to 3:1 SWR. 1500-3000 volts high voltage.
Front Panel Controls	LOAD: 1 to 10. TUNE: 80, 40, 20, 15, and 10 meters. BAND: 80, 40, 20, 15, and 10 meters. RELative Power SENSitivity. Meter Switch: GRID, PLATE, REL PWR, SWR, and HV. Power Switch: OFF, ON.
Tube Complement	Two 572-B (or two T-160-L) in parallel.
Power Requirements	120 volts AC at 16 amperes (maximum). 240 volts AC at 8 amperes (maximum).
Cabinet Size	14-7/8" wide x 6-5/8" high x 13-3/8" deep.
Net Weight	35 lbs.

SB-200

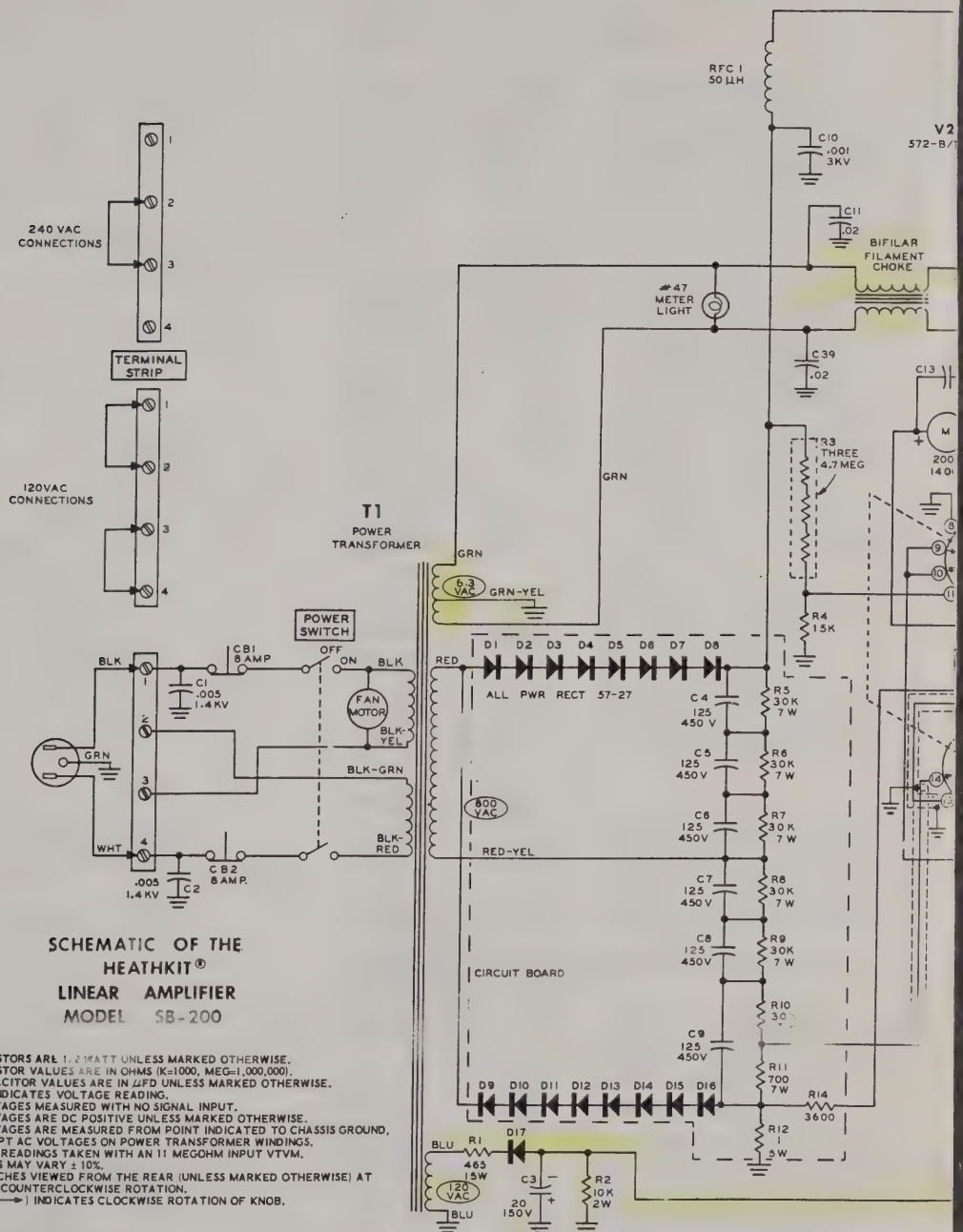

SCHEMATIC OF THE HEATHKIT®
LINEAR AMPLIFIER
MODEL SB-200

NOTES:
ALL RESISTORS ARE 1/2 WATT UNLESS MARKED OTHERWISE.
ALL RESISTOR VALUES ARE IN OHMS (K=1000, MEG=1,000,000).
ALL CAPACITOR VALUES ARE IN µFD UNLESS MARKED OTHERWISE.
(⬭) INDICATES VOLTAGE READING.
ALL VOLTAGES MEASURED WITH NO SIGNAL INPUT.
ALL VOLTAGES ARE DC POSITIVE UNLESS MARKED OTHERWISE.
ALL VOLTAGES ARE MEASURED FROM POINT INDICATED TO CHASSIS GROUND, EXCEPT AC VOLTAGES ON POWER TRANSFORMER WINDINGS.
VOLTAGE READINGS TAKEN WITH AN 11 MEGOHM INPUT VTVM.
VOLTAGES MAY VARY ± 10%.
ALL SWITCHES VIEWED FROM THE REAR (UNLESS MARKED OTHERWISE) AT FULL COUNTERCLOCKWISE ROTATION.
ARROW (⟶) INDICATES CLOCKWISE ROTATION OF KNOB.

SB-200

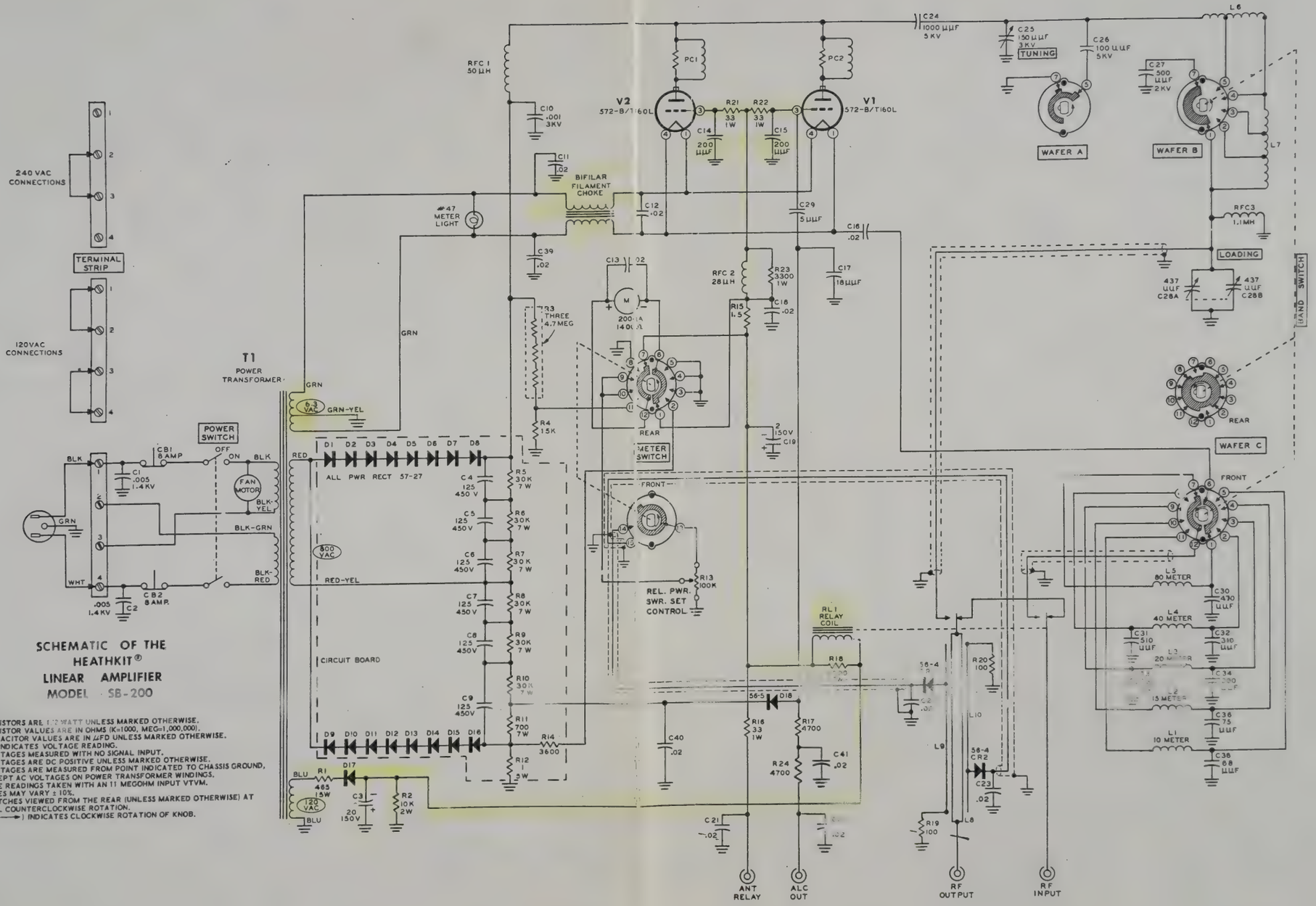

SCHEMATIC OF THE
HEATHKIT®
LINEAR AMPLIFIER
MODEL SB-200

NOTES:
ALL RESISTORS ARE 1/2 WATT UNLESS MARKED OTHERWISE.
ALL RESISTOR VALUES ARE IN OHMS (K=1000, MEG=1,000,000).
ALL CAPACITOR VALUES ARE IN µFD UNLESS MARKED OTHERWISE.
(oval) INDICATES VOLTAGE READING.
ALL VOLTAGES MEASURED WITH NO SIGNAL INPUT.
ALL VOLTAGES ARE DC POSITIVE UNLESS MARKED OTHERWISE.
ALL VOLTAGES ARE MEASURED FROM POINT INDICATED TO CHASSIS GROUND, EXCEPT AC VOLTAGES ON POWER TRANSFORMER WINDINGS.
VOLTAGE READINGS TAKEN WITH AN 11 MEGOHM INPUT VTVM.
VOLTAGES MAY VARY ± 10%.
ALL SWITCHES VIEWED FROM THE REAR (UNLESS MARKED OTHERWISE) AT FULL COUNTERCLOCKWISE ROTATION.
ARROW (⟶) INDICATES CLOCKWISE ROTATION OF KNOB.

REPLACEMENT PARTS PRICE LIST

PART No.	PRICE Each	DESCRIPTION
RESISTORS		
1/2 Watt		
1-140	.15	1.5 Ω
1-3	.10	100 Ω
1-16	.10	4700 Ω
1-21	.10	15 KΩ
2-121	.10	3600 Ω precision
1 Watt		
1-14-1	.10	33 Ω
1-3-1	.10	3300 Ω
1-38-1	.10	4.7 megohm
Other Resistors		
1-3-2	.20	10 KΩ 2 watt
3-25-5	.90	1 Ω 5 watt
3-12-7	.15	700 Ω 7 watt
3-14-7	.15	2000 Ω 7 watt
5-2-7	.30	30 KΩ 7 watt
3-2-17	.35	465 Ω 15 watt
CAPACITORS		
20 40	.20	470 μμf silver mica
20-123	.50	500 μμf 2 KV silver mica (.0005)
20-42	.20	510 μμf silver mica
20-76	.15	68 μμf mica
20-110	.15	75 μμf mica
20-108	.20	200 μμf mica
20-112	.25	310 μμf mica
20-131	.25	360 μμf mica
21-78	.10	5 μμf disc
21-60	.10	18 μμf disc
21-72	.20	.005 μfd 1.4 KV disc
21-90	.20	.001 μfd 3 KV disc
21-31	.10	.02 μfd disc
21-109	5.00	100 μμf 5 KV tubular ceramic
21-80	4.30	1000 μμf 5 KV tubular ceramic
25-39	.60	2 μfd 150 V electrolytic
25-19	.55	20 μfd 150 V electrolytic
25-34	2.10	125 μfd 450 V electrolytic
26-96	9.80	150 μμf, 3 KV, variable
26-97	16.40	874.8 μμf variable, 2-section

PART No.	PRICE Each	DESCRIPTION
CONTROLS-SWITCHES		
10-12	.45	100 KΩ control
61-14	2.40	DPST rocker switch
63-351	4.35	3-wafer rotary switch
63-352	3.05	1-wafer rotary switch
65-15	1.80	8 ampere circuit breal
69-5	5.00	DPDT 110 V AC relay
COILS-CHOKES-TRANSFORMERS		
40-98	.55	RF driver element
40-99	.10	RF pickup element
40-591	.55	80 meter input coil
40-592	.55	40 meter input coil
40-593	.55	20 meter input coil
40-727	.50	15 meter input coil
40-728	.50	10 meter input coil
40-596	1.40	10 and 15 meter final c
40-597	4.00	20, 40, and 80 meter fi coil
45-4	.40	1.1 mh RF choke
45-60	3.05	10 μh RF choke
45-18	.30	28 μh RF choke
45-61	.60	50 μh RF choke
45-53	.40	Parasitic RF choke
54-151	27.00	Power transformer
DIODES-TUBES		
56-26	.30	1N191 crystal diode
56-24	.60	IN458 silicon diode
57-27	.60	Silicon diode
411-198	18.15	572-B tube or T160-L
INSULATORS-GROMMETS-TERMINAL STRIPS-SOCKETS		
71-5	.45	Ceramic standoff insula with 6-32 stud
73-4	.10	5/16" grommet
73-1	.10	3/8" grommet
73-3	.10	1/2" grommet
75-29	.60	Line cord strain relief
431-50	.10	1-lug terminal strip
431-16	.10	2-lug terminal strip
431-10	.10	3-lug terminal strip
431-11	.10	5-lug terminal strip
431-45	.10	6-lug terminal strip
431-13	.15	Screw type terminal st
434-9	.30	4-lug tube socket
434-42	.10	Phono socket
436-5	.85	Coaxial socket
438-9	.75	Coaxial plug
438-12	.20	Coaxial plug insert
438-4	.10	Phono plug

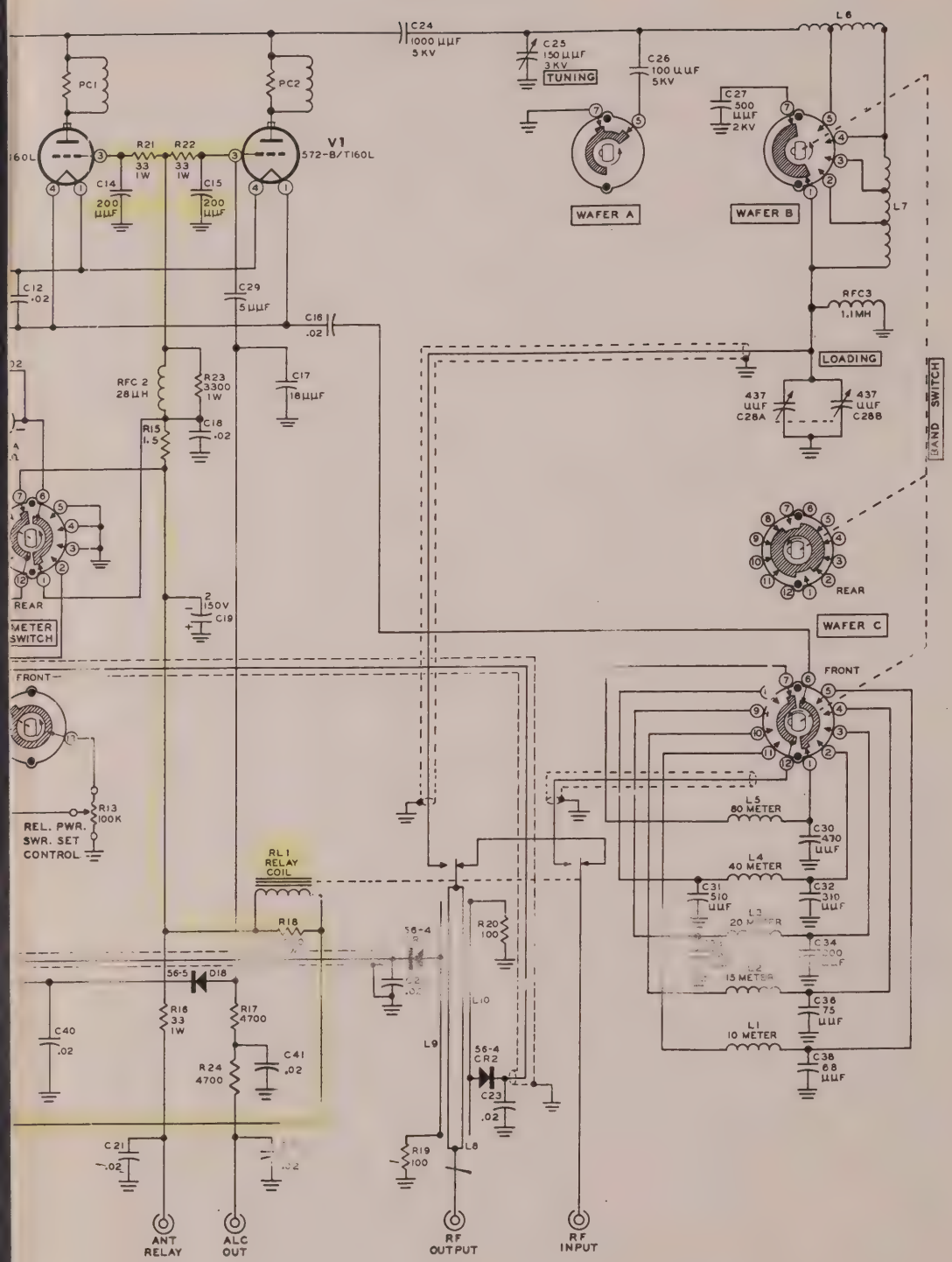
C24
1000 µµF
5 KV
C25
150 µµF
3 KV
TUNING
C26
100 µµF
5 KV
L6
C27
500
µµF
2 KV
PC1
PC2
V1
572-B/T160L
R21
33
1W
R22
33
1W
C14
200
µµF
C15
200
µµF
WAFER A
WAFER B
L7
C12
.02
C29
5 µµF
C16
.02
RFC3
1.1MH
LOADING
RFC 2
28 µH
R23
3300
1W
C17
18 µµF
R15
1.5
C18
.02
437
µµF
C28A
437
µµF
C28B
BAND SWITCH
REAR
2
150V
C19
METER
SWITCH
WAFER C
FRONT
R13
100K
REL. PWR.
SWR. SET
CONTROL
RL1
RELAY
COIL
R18
56-4
R20
100
56-5
D18
L5
80 METER
C30
470
µµF
L4
40 METER
C31
510
µµF
C32
310
µµF
L3
20 METER
C34
200
µµF
L2
15 METER
C36
75
µµF
L1
10 METER
C38
68
µµF
R16
33
1W
R17
4700
C40
.02
R24
4700
C41
.02
L10
L9
56-4
CR2
C23
.02
C21
.02
R19
100
L8
ANT
RELAY
ALC
OUT
RF
OUTPUT
RF
INPUT

MODEL

SB-200 Linear Amplifier

HEATHKIT®

ASSEMBLY MANUAL

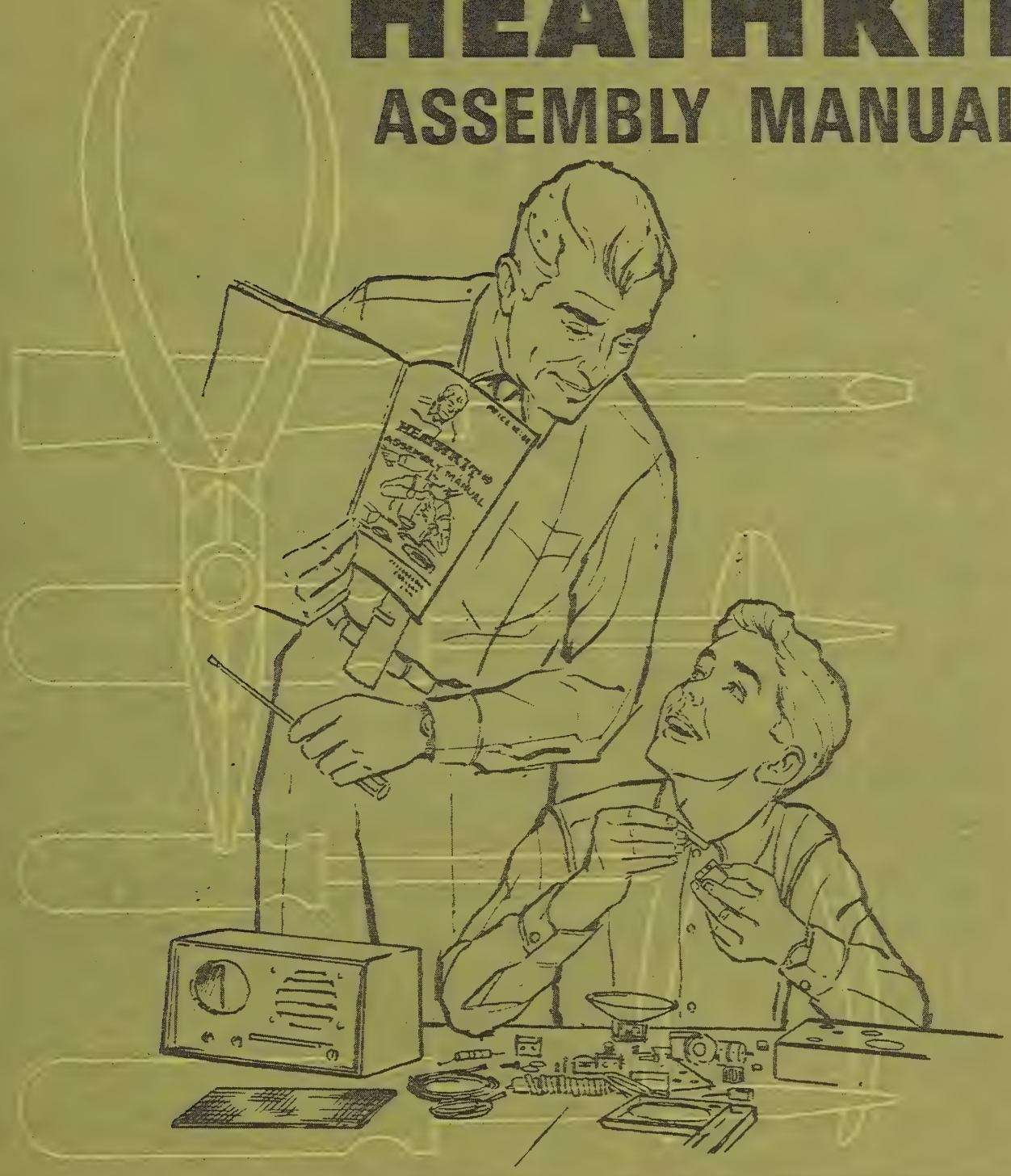

HEATHKIT®

Copyright © 1964
Heath Company
All rights reserved

595-682-05

PRICE $2.00

Dear Customer:

The Heathkit electronic product you have purchased is one of the best performing electronic products in the world.

Here's how we aim to keep it that way:

Your Heathkit Warranty

During your first 90 days of ownership, any parts which we find are defective, either in materials or workmanship, will be replaced or repaired free of charge. And we'll pay shipping charges to get those parts to you — anywhere in the world.

If we determine a defective part has caused your Heathkit electronic product to need other repair, through no fault of yours, we will service it free — at the factory, at any retail Heathkit Electronic Center, or through any of our authorized overseas distributors.

This protection is exclusively yours as the original purchaser. Naturally, it doesn't cover damage by use of acid-core solder, incorrect assembly, misuse, fire, flood or acts of God. But, it does insure the performance of your Heathkit electronic product anywhere in the world — for most any other reason.

After-Warranty Service

What happens after warranty? We won't let you down. If your Heathkit electronic product needs repairs or you need a part, just write or call the factory, your nearest retail Heathkit Electronic Center, or any Heath authorized overseas distributor. We maintain an inventory of replacement parts for each Heathkit model at most locations — even for many models that no longer appear in our current product line-up. Repair service and technical consultation are available through all locations.

We hope you'll never need our repair or replacement services, but it's nice to know you're protected anyway — and that cheerful help is nearby.

Sincerely,

HEATH COMPANY
Benton Harbor, Michigan 49022

CAUTION

Use extreme care during initial testing and all subsequent operation of this Linear Amplifier. While the SB-200 is designed for maximum safety, never lose respect for the high voltage present in this unit. Protect yourself always against lethal or severe electric shock.

HEATH COMPANY

Assembly
and
Operation
of the

HEATHKIT

LINEAR AMPLIFIER

MODEL SB-200

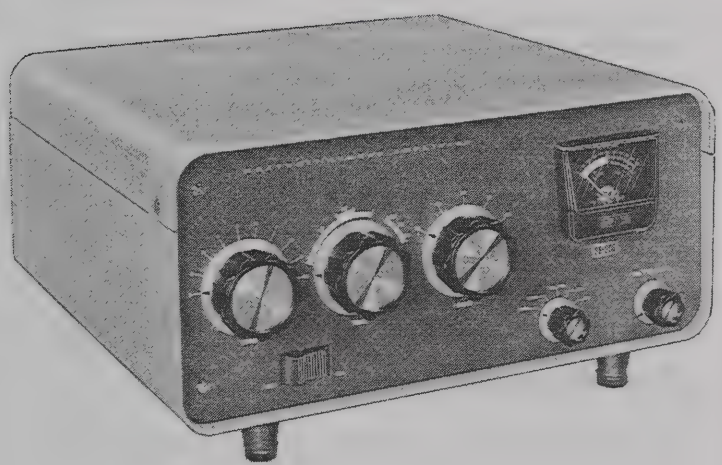

TABLE OF CONTENTS

Specifications. 4

Introduction. 5

Circuit Description. 5

Construction Notes. 7

Parts List. 8

Proper Soldering Techniques. 10

Circuit Board Wiring And Soldering 12

Step-By-Step Procedure 13

Step-By-Step Assembly

- Circuit Board Assembly. 14
- Parts Mounting Chassis. 15
- Parts Mounting - RF Shield. 19
- Wiring RF Shield. 22
- Wiring-Chassis Bottom. 25
- Wiring-SWR Bridge. 30
- Wiring-Chassis Top. 32
- Final Wiring. 36

Initial Test. 42

Final Assembly. 42

Installation. 43

Operation. 47

In Case Of Difficulty. 50

Factory Repair Service 51

Schematic. . . . (fold-out from page). 51

Replacement Parts Price List
(fold-out from page). 52

HEATH COMPANY
BENTON HARBOR, MICHIGAN 49022

SPECIFICATIONS

Band Coverage	80, 40, 20, 15, and 10 meters.
Maximum Power Input	SSB: 1200 watts P.E.P. CW: 1000 watts.
Driving Power Required	100 watts.
Duty Cycle	SSB: continuous voice modulation. CW: 50% (key down time not to exceed 5 minutes).
Third Order Distortion	-30 db or better at 1000 watts P.E.P.
Output Impedance	50 to 75 Ω unbalanced; variable pi-output circuit. SWR not to exceed 2:1.
Input Impedance	52 Ω unbalanced; broad-band pretuned input circuit requires no tuning.
Meter Functions	0-100 ma grid current (white area). 0-1000 ma plate current. 0-1000 relative power. 1:1 to 3:1 SWR. 1500-3000 volts high voltage.
Front Panel Controls	LOAD: 1 to 10. TUNE: 80, 40, 20, 15, and 10 meters. BAND: 80, 40, 20, 15, and 10 meters. RELative Power SENSitivity. Meter Switch: GRID, PLATE, REL PWR, SWR, and HV. Power Switch: OFF, ON.
Tube Complement	Two 572-B (or two T-160-L) in parallel.
Power Requirements	120 volts AC at 16 amperes (maximum). 240 volts AC at 8 amperes (maximum).
Cabinet Size	14-7/8" wide x 6-5/8" high x 13-3/8" deep.
Net Weight	35 lbs.

The Heath Company reserves the right to discontinue instruments and to change specifications at any time without incurring any obligation to incorporate new features in instruments previously sold.

INTRODUCTION

With the increasing popularity of single sideband, suppressed-carrier phone transmission as a mode of amateur radio communication, more Amateurs are finding it possible to run higher transmitter power inputs than they could previously afford with conventional AM equipment. Since high-level modulating equipment is not necessary in single-sideband service, the cost of converting to high power is considerably reduced.

In keeping with this trend toward higher power in single-sideband service, the Heathkit Model SB-200 Linear Amplifier was designed to provide high power capability and complete versatility. Nearly any of the popular SSB and CW exciters available today can be used as a driver for this Amplifier.

The amplifier RF compartment is completely enclosed by perforated aluminum shielding. This type of construction increases stability and greatly decreases radiation that could cause TVI. The Amplifier is forced-air cooled to prolong tube life.

CIRCUIT DESCRIPTION

POWER SUPPLY

The power supply uses a power transformer which has dual-primary and triple-secondary windings. The primary winding may be connected for either 120 or 240 volt AC operation. The blower fan is connected across one-half of the primary winding. The transformer is protected against overload by reset type circuit breakers CB1 and CB2.

One secondary winding of the power transformer supplies 6.3 volts AC for the tube filaments and the pilot lamp in the meter. Another secondary winding is used with silicon diodes D1 through D16 and electrolytic capacitors C4 through C9 in a full-wave voltage-doubler circuit to provide plate voltage for the tubes. Resistors R5 through R10 insure that the voltage across each of the electrolytic capacitors is equalized; these resistors also serve as a bleeder network.

Resistor R11 at the bottom of the bleeder network provides an ALC threshold voltage of approximately 10 volts DC. Resistor R12 provides a means of measuring plate current independently, without also measuring bleeder current.

The third secondary winding, with resistors R1 and R2, capacitor C3, and silicon diode D17 forms a half-wave rectifier circuit. This circuit provides antenna relay control voltage and cut-off bias voltage for the grids of the amplifier tubes.

INPUT CIRCUIT

Tubes V1 and V2 are connected in parallel in a cathode-driven (grounded grid), class B configuration. Driving power for each band is coupled through a broad-band network, consisting of a coil and associated capacitors, and through capacitor C16 to the cathodes of tubes V1 and V2. Coils L1 through L5 with their associated capacitors are used to make up these impedance-matching networks, which reduce distortion and increase efficiency.

The correct input network, as well as the correct output circuit coil tap, for each band is selected with the Band switch. (The coils in the input networks are factory aligned and require no further adjustment.)

To keep the capacitance of the transformer filament winding from shunting the RF driving power to ground, the filament winding is isolated from the cathode circuit by a bifilar-wound filament choke. Also, this choke provides a cathode current path to ground.

OUTPUT CIRCUIT

High voltage is applied to the plates of tubes V1 and V2 through RF choke RFC1 and parasitic chokes PC1 and PC2. Tuning capacitor C25 is connected on the input side of tapped final coils L6 and L7. C26 is switched in parallel with the Tuning capacitor on the 80 meter band.

Loading capacitors C28A and C28B are on the output side of final coils L6 and L7. Capacitor C27 is switched in parallel with the Loading capacitor on the 80 meter band. Output power is applied through antenna change-over relay RL1 and through the SWR (standing wave ratio) bridge circuit to the RF Output connector. The SWR bridge consists of L8, L9, and L10, capacitors C20 and C23, resistors R19 and R20, and crystal diodes CR1 and CR2.

ANTENNA CHANGE-OVER AND CUTOFF BIAS CIRCUITS

Antenna change-over relay RL1 is controlled by a VOX (voice operated transmitter) relay in the exciter used with the Linear Amplifier. The relay in the exciter is connected to the Antenna Relay jack of the Linear Amplifier. When transmitting, the VOX relay grounds the Antenna Relay; when receiving, the Antenna Relay is ungrounded.

While receiving, cut-off bias voltage from the power supply bias circuit is applied through the coil of relay RL1, and through resistor R15 and choke RFC2, to the grids of tubes V1 and V2. The Antenna Relay jack is ungrounded and no current will flow through the coil of relay RL1, which allows the relay to remain open. Thus it connects the RF Output jack (antenna) to the RF Input jack of the Linear Amplifier.

When transmitting, the Antenna Relay jack is grounded by the VOX relay of the exciter. This allows current to flow through the coil of relay RL1 and actuate the relay. When actuated, relay RL1 connects the RF Output jack (antenna) to the output circuit of the Linear Amplifier. Grounding the Antenna Relay jack also grounds the grids of tubes V1 and V2 through RFC2, and resistors R15 and R16. This removes all but -2 volts from the grids of the tubes. This -2 volts is operating bias, which limits resting plate current to approximately 90 milliamperes.

When operating with the Linear Amplifier turned OFF, there is no bias voltage to operate relay RL1 and the RF Input jack remains connected to the antenna, through RF Output jack. This permits low power operation directly from the exciter into the antenna without changing any cables. Because silicon rectifiers and instant-heating-filament tubes are used in the Linear Amplifier, you can go to high power operation as soon as the Linear Amplifier is turned ON.

METERING CIRCUITS

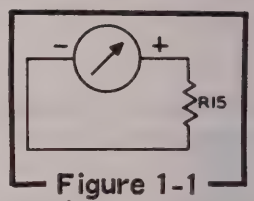

Figure 1-1

GRID - Figure 1-1

In the Grid position of the meter switch, the meter is connected to measure the voltage across grid resistor R15. The voltage across this resistor is directly proportional to the grid current which flows through it; therefore, the meter will indicate grid current. Since grid current in tubes V1 and V2 should not exceed 100 ma, only half (white area) of the 0-200 ma meter scale is used for this measurement.

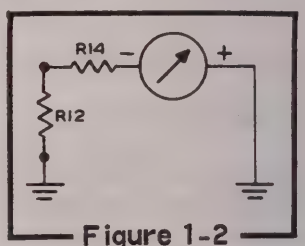

Figure 1-2

PLATE - Figure 1-2

Plate current is read on the top scale of the meter. This scale is divided into 20 ma divisions from 0 to 1000 ma. Plate current readings are obtained by measuring the voltage across resistor R12, through series resistor R14.

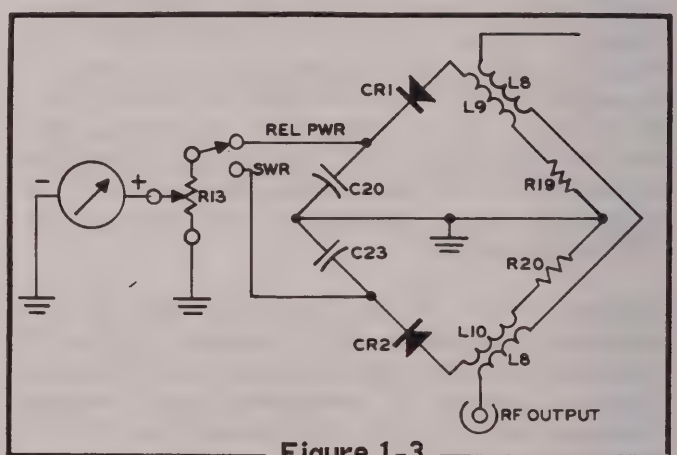

Figure 1-3

REL PWR And SWR - Figure 1-3

Relative Power and Standing Wave Ratio are measured with a bridge circuit, consisting of coils L8, L9, and L10, diodes CR1 and CR2, resistors R19 and R20, and capacitors C20 and

C23. Relative Power Sensitivity control R13 sets the sensitivity of the meter. The REL PWR position is used when adjusting the TUNE and LOAD controls for maximum output of the Linear Amplifier; this meter function is also used to establish a "set" meter level for making SWR measurements.

Because coil L8 of the bridge circuit is connected in series between the RF Input and RF Output jacks when the Linear Amplifier is turned OFF, the meter can be used to measure REL PWR and SWR when operating the exciter alone. This method of checking SWR is recommended for accurately determining antenna performance.

In the bridge circuit, RF current is inductively and capacitively coupled from L8, to L9 and L10. The RF currents in L9 and L10 are rectified by diodes CR1 and CR2, and then filtered by capacitors C20 and C23.

For REL PWR measurements, the rectified RF voltage from L9 is applied to the meter. For SWR (reflected power) measurements, the rectified RF voltage from L10 is applied to the meter.

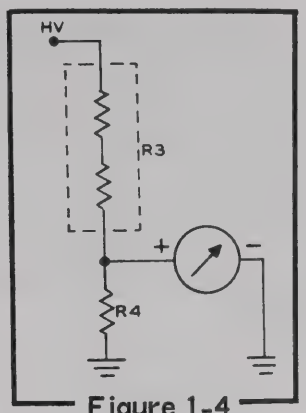

Figure 1-4

HV - Figure 1-4

High Voltage is measured with a voltage divider network consisting of resistors R3 and R4. The voltage across resistor R4 is applied to the meter. High voltage is read on the lower right-hand meter scale (1500 to 3000).

CONSTRUCTION NOTES

This manual is supplied to assist you in every way to complete your kit with the least possible chance for error. The arrangement shown is the result of extensive experimentation and trial. If followed carefully, the result will be highly stable and dependable performance. We suggest that you retain the manual in your files for future reference, both in the use of the equipment and for its maintenance.

UNPACK THE KIT CAREFULLY AND CHECK EACH PART AGAINST THE PARTS LIST. In so doing, you will become acquainted with the parts. Refer to the information on the inside covers of the manual to help you identify the components. If some shortage or parts damage is found in checking the Parts List, please read the Replacements section and supply the information called for therein.

Resistors generally have a tolerance rating of 10% unless otherwise stated in the Parts List. Tolerances on capacitors are generally even greater. Limits of +100% and -20% are common for electrolytic capacitors.

We suggest that you do the following before work is started:

1. Lay out all parts so that they are readily available.
2. Provide yourself with good quality tools. Basic tool requirements consist of a screwdriver with a 1/4" blade; a small screwdriver with a 1/8" blade; phillips screwdriver; long-nose pliers; wire cutters, preferably separate diagonal cutters; a penknife or a tool for stripping insulation from wires; a soldering iron (or gun) and rosin core solder. A set of nut drivers and a nut starter, while not necessary, will aid extensively in construction of the kit.

Most kit builders find it helpful to separate the various parts into convenient categories. Muffin tins or molded egg cartons make convenient trays for small parts. Resistors and capacitors may be placed with their lead ends inserted in the edge of a piece of corrugated cardboard until they are needed. Values can be written on the cardboard next to each component. The illustration shows one method that may be used.

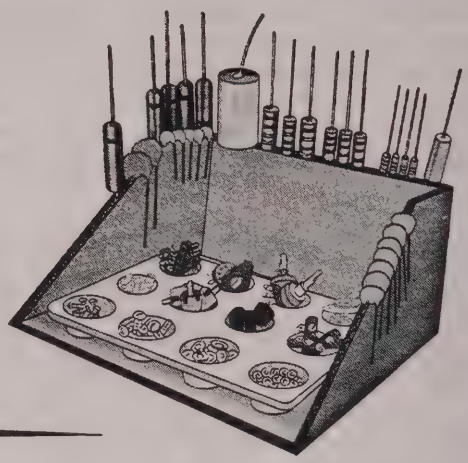

PARTS LIST

The numbers in parenthese in the Parts List are Keyed to the numbers on the Parts Pictorial to aid in parts identification.

To order replacement parts, refer to the "Replacement Parts Price List" and use the Parts Order Form furnished with this kit.

	PART No.	PARTS Per Kit	DESCRIPTION
	RESISTORS		
	1/2 WATT		
(1)	1-140	1	1.5 Ω (brown-green-gold-silver)
	1-3	2	100 Ω (brown-black-brown)
	1-16	2	4700 Ω (yellow-violet-red)
	1-21	1	15 KΩ (brown-green-orange)
	2-121	1	3600 Ω precision
	1 WATT		
(2)	1-14-1	3	33 Ω (orange-orange-black)
	1-3-1	1	3300 Ω (orange-orange-red)
	1-38-1	3	4.7 megohm (yellow-violet-green)
	OTHER RESISTORS		
(3)	1-3-2	1	10 KΩ 2 watt (brown-black-orange)
(4)	3-25-5	1	1 Ω 5 watt
	3-12-7	1	700 Ω 7 watt
	3-14-7	1	2000 Ω 7 watt
	5-2-7	6	30 KΩ 7 watt
(5)	3-2-17	1	465 Ω 15 watt
	CAPACITORS		
(6)	20-40	1	470 μμf silver mica
	20-123	1	500 μμf 2 KV silver mica (.0005)
	20-42	1	510 μμf silver mica

	PART No.	PARTS Per Kit	DESCRIPTION
	CAPACITORS (Cont'd.)		
(7)	20-76	1	68 μμf mica
	20-110	1	75 μμf mica
	20-108	3	200 μμf mica
	20-112	1	310 μμf mica
	20-131	1	360 μμf mica
(8)	21-78	1	5 μμf disc
	21-60	1	18 μμf disc
	21-72	2	.005 μfd 1.4 KV disc
	21-90	1	.001 μfd 3 KV disc
	21-31	12	.02 μfd disc
(9)	21-109	1	100 μμf 5 KV tubular ceramic
	21-165	1	1000 μμf 6 KV tubular ceramic
(10)	25-39	1	2 μfd 150 V electrolytic
	25-19	1	20 μfd 150 V electrolytic
(11)	25-34	6	125 μfd 450 V electrolytic
	26-96	1	150 μμf, 3 KV, variable
	26-97	1	874.8 μμf variable, 2-section
	CONTROLS-SWITCHES		
(12)	10-12	1	100 KΩ control
(13)	61-14	1	DPST rocker switch
	63-351	1	3-wafer rotary switch
	63-352	1	1-wafer rotary switch
(14)	65-15	2	8 ampere circuit breaker
	69-5	1	DPDT 110 V AC relay

PART No.	PARTS Per Kit	DESCRIPTION
COILS-CHOKES-TRANSFORMERS		
(15) 40-98	1	RF driver element
(16) 40-99	2	RF pickup element
(17) 40-591	1	80 meter input coil
40-592	1	40 meter input coil
40-593	1	20 meter input coil
40-727	1	15 meter input coil
40-728	1	10 meter input coil
(18) 40-596	1	10 and 15 meter final coil
(19) 40-597	1	20, 40, and 80 meter final coil
(20) 45-4	1	1.1 mh RF choke
(21) 45-60	1	10 μh RF choke
(22) 45-18	1	28 μh RF choke
(23) 45-61	1	50 μh RF choke
(24) 45-53	2	Parasitic RF choke
54-151	1	Power transformer
DIODES-TUBES		
(25) 56-26	2	1N191 crystal diode (brown-white-brown)
(26) 56-24	1	IN458 silicon diode (yellow-green-gray)
(27) 57-27	17	Silicon diode
411-198	2	572-B tube or T160-L
INSULATORS-GROMMETS-TERMINAL STRIPS-SOCKETS		
(28) 71-5	1	Ceramic standoff insulator with 6-32 stud
73-4	2	5/16" grommet
73-1	2	3/8" grommet
73-3	1	1/2" grommet
(29) 75-29	1	Line cord strain relief
(30) 431-50	1	1-lug terminal strip
(31) 431-16	1	2-lug terminal strip
431-10	2	3-lug terminal strip
431-11	1	5-lug terminal strip
431-45	2	6-lug terminal strip
431-13	1	Screw type terminal strip
(32) 434-9	2	4-lug tube socket
(33) 434-42	3	Phono socket
(34) 436-5	1	Coaxial socket
(35) 438-9	1	Coaxial plug
(36) 438-12	1	Coaxial plug insert
(37) 438-4	3	Phono plug

PART No.	PARTS Per Kit	DESCRIPTION
WIRE-CABLE-SLEEVING		
89-22	1	Line cord
134-107	1	Cable assembly
340-1	1	Bare wire
344-52	1	Red solid hookup wire
344-54	1	Yellow solid hookup wire
344-55	1	Green solid hookup wire
344-58	1	Gray solid hookup wire
344-13	1	Large blue hookup wire
343-2	1	Large shielded cable (RG-58 A/U)
343-3	1	Small shielded cable
346-4	1	Small sleeving
346-3	1	Large sleeving
HARDWARE		
SCREWS		
(38) 250-213	6	4-40 x 5/16"
(39) 250-28	1	6-32 x 1/4" setscrew
(40) 250-8	21	#6 x 3/8" sheet metal screw
(41) 250-138	2	6-32 x 3/16" screw
(42) 250-56	37	6-32 x 1/4"
(43) 250-89	21	6-32 x 3/8"
(44) 250-218	4	6-32 x 3/8" phillips head
(45) 250-32	8	6-32 x 3/8" flat head
(46) 250-26	1	6-32 x 5/8"
(47) 250-29	4	6-32 x 3/4"
(48) 250-40	2	6-32 x 1-1/2"
(49) 250-260	2	8-32 x 1/4"
(50) 250-43	8	8-32 x 1/4" setscrew
(51) 250-141	4	10-24 x 1/2"
(52) 250-126	2	10-32 x 1/2"
(53) 250-67	1	10-24 x 1-1/8" phillips head
(54) 251-1	2	6-32 spade bolt
NUTS		
(55) 252-15	6	4-40
(56) 252-3	63	6-32
(57) 252-30	5	10-24
(58) 252-31	1	10-24 wingnut
(59) 252-7	3	Control

PART No.	PARTS Per Kit	DESCRIPTION
WASHERS		
(60) 253-27	2	5/16" flat steel
(61) 253-8	4	7/16" flat brass
(62) 253-60	8	3/8" flat steel
(63) 253-1	2	3/8" fiber flat
(64) 253-3	4	1/2" fiber flat
(65) 253-7	2	1/2" fiber shoulder
(66) 253-10	3	Flat control
(67) 253-19	4	3/4" flat steel
(68) 254-9	6	#4 lockwasher
(69) 254-1	67	#6 lockwasher
(70) 254-3	5	#10 lockwasher
(71) 254-4	3	Control lockwasher
MISCELLANEOUS		
(72) 255-2	1	3/16" spacer
(73) 255-42	4	3/4" phenolic spacer
(74) 255-12	3	Plastic spacer
(75) 255-59	2	Tapered spacer
(76) 259-1	18	#6 solder lug
(77) 259-5	1	#10 solder lug
(78) 259-10	1	Control solder lug
(79) 260-34	2	Anode clip
(80) 435-1	2	Socket ring

PART No.	PARTS Per Kit	DESCRIPTION
METAL PARTS		
(81) 40-100	1	Coaxial cavity
90-341	1	Cabinet
200-403-1	1	Chassis
203-384-1	1	Front panel
(82) 205-492	1	Capacitor mounting bracket
(83) 204-560	2	Angle bracket
(84) 204-611	1	Circuit breaker mounting bracket
206-254	1	RF shield
(85) 206-255	1	Power supply shield
205-438	1	Top plate
MISCELLANEOUS		
85-88-2	1	Circuit board
(86) 261-9	4	Rubber foot
266-21	1	Fan blade
390-147	2	DANGER label
391-31	1	Nameplate
407-103	1	Meter
420-3	1	Motor
(87) 432-27	1	3-prong AC adapter
462-191	2	Small knob
462-210	3	Large knob
	1	Manual (See front cover for part number.)
		Solder

PROPER SOLDERING TECHNIQUES

Only a small percentage of customers find it necessary to return equipment for factory service. By far the largest portion of malfunctions in this equipment are due to poor or improper soldering.

If terminals are bright and clean and free of wax, frayed insulation and other foreign substances, no difficulty will be experienced in soldering. Correctly soldered connections are essential if the performance engineered into a kit is to be fully realized. If you are a beginner with no experience in soldering, a half hour's practice with some odd lengths of wire may be a worthwhile investment.

For most wiring, a 25 to 100 watt iron or its equivalent in a soldering gun is very satisfactory. A lower wattage iron than this may not heat the connection enough to flow the solder smoothly. Keep the iron tip clean by wiping it from time to time with a cloth.

CHASSIS WIRING AND SOLDERING

1. Unless otherwise indicated, all wire used is the type with colored insulation (hookup wire). In preparing a length of hookup wire, 1/4" of insulation should be removed from each end unless directed otherwise in the assembly step.

2. To avoid breaking internal connections when stripping insulation from the leads of transformers or similar components, care should be taken not to pull directly on the lead. Instead, hold the lead with pliers while it is being stripped.

3. Leads on resistors, capacitors, and similar components are generally much longer than need be to make the required connections. In these cases, the leads should be cut to proper length before the part is installed. In general, the leads should be just long enough to reach their terminating points.

4. Wherever there is a possibility of bare leads shorting to other parts or to the chassis, the leads should be covered with insulating sleeving. Where the use of sleeving is specifically intended, the phrase "use sleeving" is included in the associated assembly step. In any case where there is the possibility of an unintentional short circuit, sleeving should be used. Extra sleeving is provided for this purpose.

5. Crimp or bend the lead (or leads) around the terminal to form a good joint without relying on solder for physical strength. If the lead is too large to allow bending or if the step states that it is not to be crimped, position it so that a good solder connection can still be made.

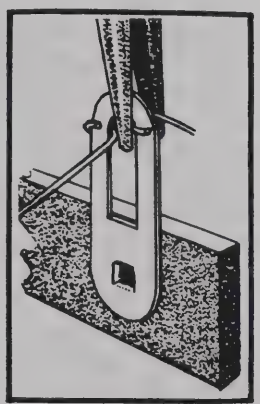

6. Position the work, if possible, so that gravity will help to keep the solder where you want it.

7. Place a flat side of the soldering iron tip against the joint to be soldered until it is heated sufficiently to melt the solder.

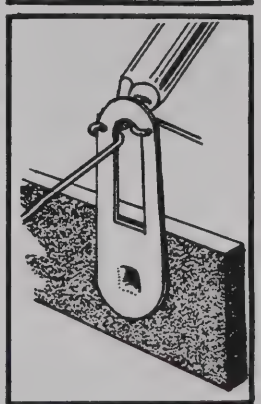

8. Then place the solder against the connection and it will immediately flow over the joint; use only enough solder to thoroughly wet the junction. It is usually not necessary to fill the entire terminal with solder.

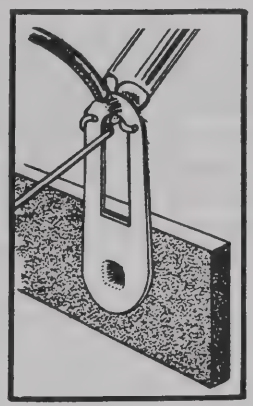

9. Remove the solder and then the iron from the completed joint. Use care not to move the leads until the solder is solidified.

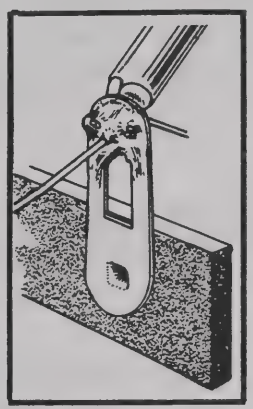

A poor or cold solder joint will usually look crystalline and have a grainy texture, or the solder will stand up in a blob and will not have adhered to the joint. Such joints should be reheated until the solder flows smoothly. In some cases, it may be necessary to add a little more solder to achieve a smooth, bright appearance.

ROSIN CORE SOLDER HAS BEEN SUPPLIED WITH THIS KIT. THIS TYPE OF SOLDER MUST BE USED FOR ALL SOLDERING IN THIS KIT. ALL GUARANTEES ARE VOIDED AND WE WILL NOT REPAIR OR SERVICE EQUIPMENT IN WHICH ACID CORE SOLDER OR PASTE FLUXES HAVE BEEN USED. IF ADDITIONAL SOLDER IS NEEDED, BE SURE TO PURCHASE ROSIN CORE (60:40 or 50:50 TIN-LEAD CONTENT) RADIO TYPE SOLDER.

CIRCUIT BOARD WIRING AND SOLDERING

Before attempting any work on the circuit board, read the following instructions carefully and study the Figures. It is only necessary to observe the following basic precautions to insure proper operation of the unit the first time it is turned on.

Proper mounting of components on the board is essential for good performance. A good general rule to follow is that all components on the board should be mounted tightly to the board, unless instructions state otherwise. All leads should be kept as short as possible to minimize the effects of stray capacity in the wiring. Proper and improper methods of mounting are illustrated in the accompanying Figures.

NOTE: Exercise care not to damage resistors or capacitors when bending the leads as shown.

Tubular capacitors and resistors will fit properly if the leads are bent as shown. Components with lugs normally require no preparation unless the lugs appear to be bent, in which case they can be straightened with pliers.

Parts should be inserted as instructed, and the leads bent outward, as illustrated, to lock them in place. After the part is in position, cut the leads off about 1/4" from the board. When a group of parts have been installed on a circuit board, solder each lead to the foil pattern and clip off the excess wire.

The actual technique of soldering leads to a circuit board is quite simple. Position the tip of the soldering iron so that it firmly contacts both the circuit board foil and the wire or lug to be soldered, as shown. The iron should be held so that solder is not likely to flow to adjacent foil conductors or connections. The solder should immediately be placed between the iron and the joint to be soldered. Remove the length of solder as soon as its end begins to melt and flow onto the lead and foil. Hold the tip of the iron in place only until the solder begins to flow outward over the foil; then remove the iron quickly.

Avoid overheating the connection. A soldering pencil or small iron (approximately 25 watts) is ideal for use in circuit board work. If only a high wattage iron or soldering gun is available, precautions must be taken to avoid circuit board damage due to overheating and excess solder.

The use of excessive amount of solder will increase the possibility of bridging between foil conductors or plugging holes which are to be left open for wires which may be added later on. If solder is accidentally bridged across insulating areas between conductors, it can be cleaned off by heating the connection carefully and quickly wiping or brushing the solder away with a soft cloth or clean brush. Holes which become plugged can be cleared by heating the area immediately over the hole while gently pushing the lead of a resistor through the hole from the opposite side, and withdrawing the lead before the solder rehardens. Do not force the lead through; too much pressure before the solder has time to soften may separate the foil from the board.

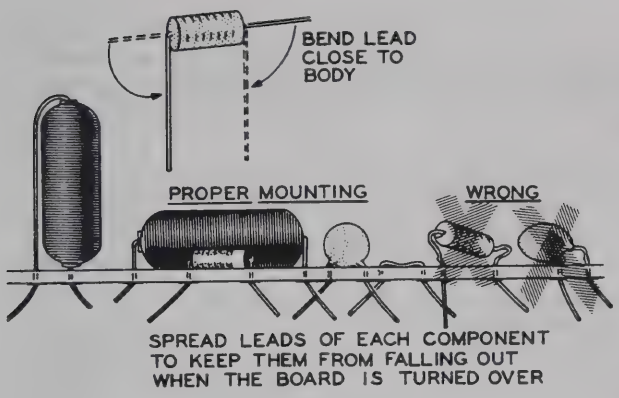
BEND LEAD CLOSE TO BODY
PROPER MOUNTING
WRONG
SPREAD LEADS OF EACH COMPONENT TO KEEP THEM FROM FALLING OUT WHEN THE BOARD IS TURNED OVER

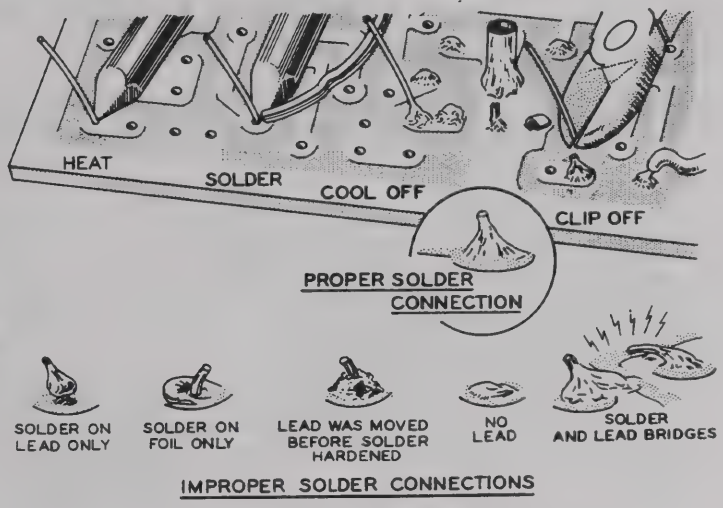

STEP-BY-STEP PROCEDURE

The following instructions are presented in a logical step-by-step sequence to enable you to complete your kit with the least possible confusion. Be sure to read each step all the way through before beginning the specified operation. Also read several steps ahead of the actual step being performed. This will familiarize you with the relationship of the subsequent operations. When the step is completed, check it off in the space provided. This is particularly important as it may prevent errors or omissions, especially if your work is interrupted. Some kit builders have also found it helpful to mark each wire and part in colored pencil on the Pictorial as it is added.

ILLUSTRATIONS

The fold-out diagrams in this manual may be removed and attached to the wall above your working area; but because they are an integral part of the instructions, they should be returned to the manual after the kit is completed. In general, the illustrations in this manual correspond to the actual configuration of the kit; however, in some instances the illustrations may be slightly distorted to facilitate clearly showing all of the parts.

SOLDERING

The abbreviation "NS" indicates that a connection should not be soldered yet as other wires will be added. When the last wire is installed, the terminal should be soldered and the abbreviation "S" is used to indicate this. Note that a number will appear after each solder instruction. This number indicates the number of leads that are supposed to be connected to the terminal in point before it is soldered. For example, if the instruction reads, "Connect a wire to lug 1 (S-2)," it will be understood that there will be two wires connected to the terminal at the time it is soldered. (In cases where a wire passes through a terminal or lug and then connects to another point, it will count as two wires, one entering and one leaving the terminal.)

STEP-BY-STEP ASSEMBLY

CIRCUIT BOARD ASSEMBLY

( ) Locate the circuit board and position it as shown in Pictorial 1; then complete the steps around this Pictorial. Be sure to read Page 12 of the manual before beginning assembly of the kit.

START

( ) Install sixteen silicon diodes. Position the cathode end of each diode as shown. Solder and cut off the excess leads except the indicated lead of the first diode.

NOTE: PLACE SILICON DIODES WITH THE CATHODE END AS DIRECTED. THE CATHODE END MAY BE IDENTIFIED BY A COLOR DOT, COLOR END, OR COLOR BAND.

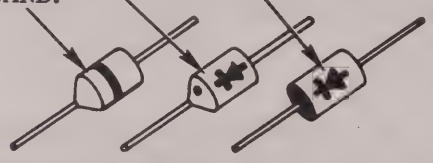

( ) Install the six 30 KΩ (30,000 Ω) 7 watt resistors. Use the 500 μμf (.0005 μfd) silver mica capacitor as a temporary spacer between each resistor and the circuit board. Solder and cut off the excess leads as each resistor is installed. Space these resistors so they do not touch the electrolytic capacitors, the circuit board, or each other.

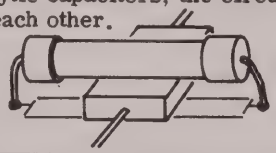

( ) Install the 700 Ω 7 watt resistor, using the 510 μμf silver mica capacitor as a temporary spacer between the resistors and circuit board. Solder and cut off the excess leads.

( ) In a like manner, install the 1 Ω 5 watt precision resistor, using the same capacitor as a spacer. Solder and cut off the excess leads.

( ) Install the 3600 Ω 1/2 watt precision resistor. Solder and cut off the excess leads.

PICTORIAL 1

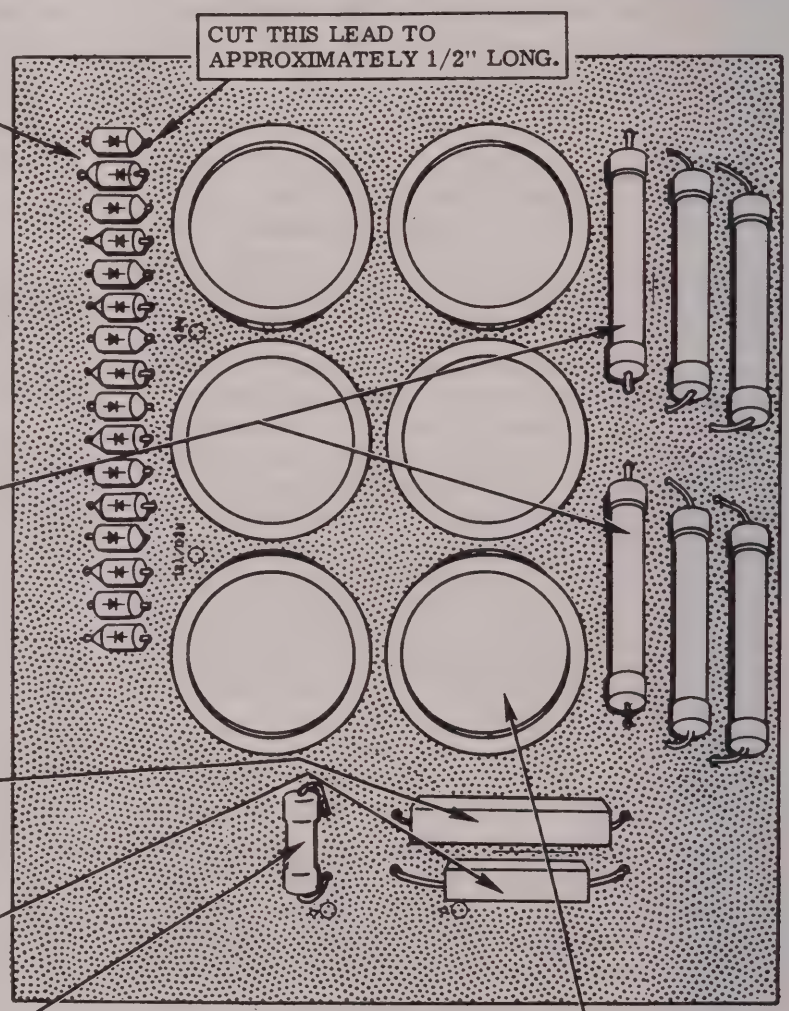

( ) Install the six 125 μfd electrolytic capacitors. Position the center lug in the large center hole and the four other lugs in outside holes in the circuit board for each capacitor. Bend the center lugs over against the foil and twist the outside lugs 1/8 turn. Solder all lugs which extend through foil.

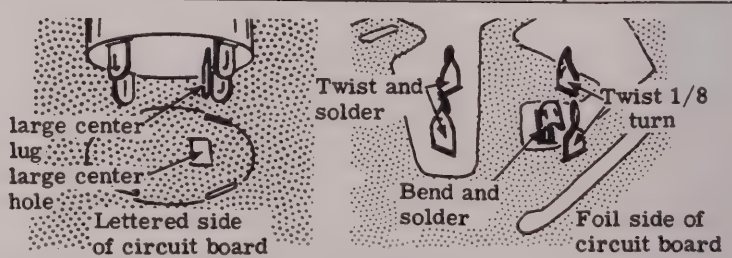

FINISH

PARTS MOUNTING-CHASSIS

Refer to Pictorial 2 (fold-out from page 12) for the following steps.

NOTE: Lockwashers and nuts will be used with all screws in mounting parts, unless stated otherwise in the assembly steps. Consequently, the following steps will call out only the size and type of hardware to be used. For example, the phrase "6-32 x 1/4" hardware" means to use 6-32 x 1/4" screws, #6 lockwashers, and 6-32 nuts.

( ) Refer to Detail 2A and install a phono socket on the rear chassis apron at T. Use 6-32 x 1/4" hardware. Position the phono socket as shown in the Pictorial. Bend lug 2 against the chassis as shown.

( ) Similarly, mount phono sockets at Y and Z, using 6-32 x 1/4" hardware. Do not bend lug 2 of these phono sockets against the chassis.

( ) Referring to Detail 2A, locate the ceramic insulator with the 6-32 stud and cut off the tip as shown.

( ) Mount the ceramic insulator at U. Use a #6 lockwasher and a 6-32 nut.

( ) Referring to Detail 2B, install the 10-24 x 1-1/8" phillips head screw at W. Use #10 lockwashers, a 10-24 nut, 3/4" flat steel washers, and a 10-24 wingnut.

( ) Referring to Detail 2C, install the coaxial socket at X. Use 4-40 x 5/16" hardware in the two holes shown. The remaining hardware for this socket will be installed later.

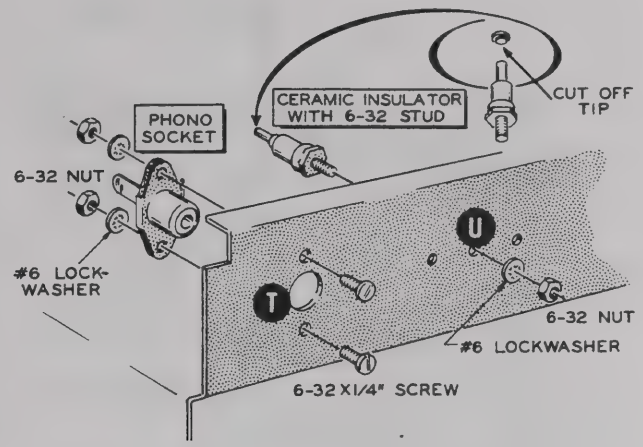

Detail 2A

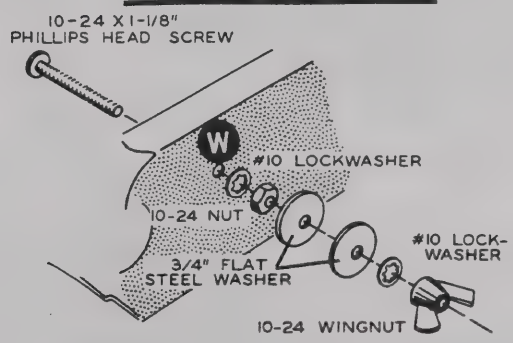

Detail 2B

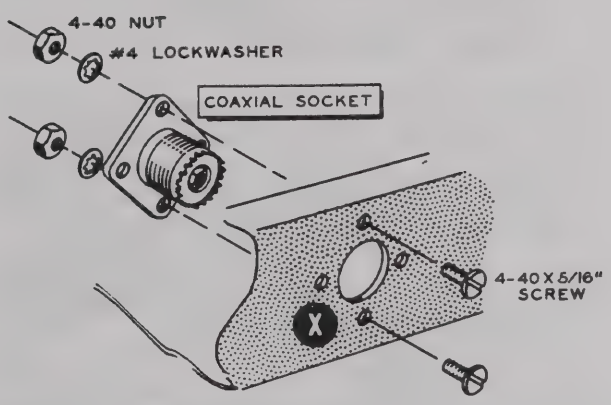

Detail 2C

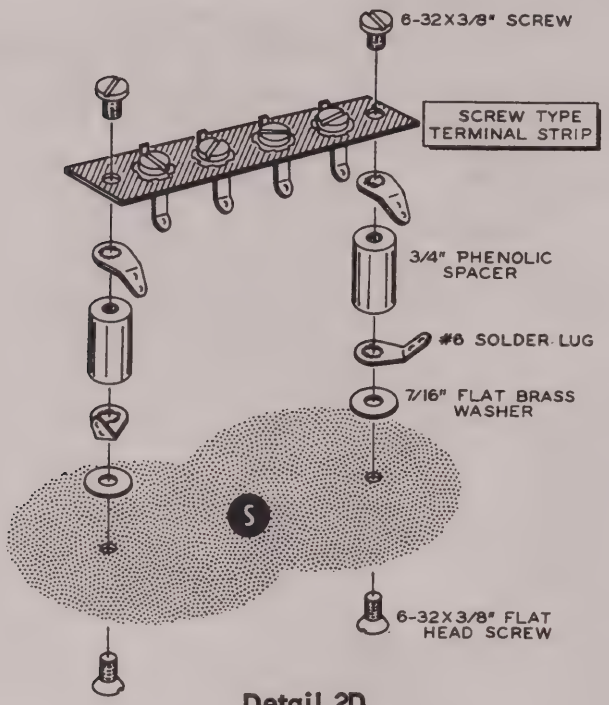

Detail 2D

( ) Refer to Detail 2D and secure two 3/4" phenolic spacers at S. Use #6 solder lugs, 7/16" flat brass washers, and 6-32 x 3/8" flat head screws. Do not overtighten the screws as the spacer threads could be stripped.

( ) Secure the screw type terminal strip to the other end of the phenolic spacers, using #6 solder lugs and 6-32 x 3/8" screws.

( ) Referring to Detail 2E, install the motor to the chassis. Use 3/8" grommets, 7/16" flat brass washers, 1/2" fiber shoulder washers, and 10-32 x 1/2" screws. Position the motor as shown in the Pictorial.

( ) Locate the fan blade and start a 6-32 x 1/4" setscrew into the fan bushing.

( ) Place the fan blade over the motor shaft so the shaft is flush with the edge of the fan blade bushing. Then tighten the setscrew.

( ) Referring to Detail 2F, install the relay (#69-5) at L. Use a 5/16" rubber grommet, three 1/2" fiber flat washers, and a 6-32 x 5/8" screw.

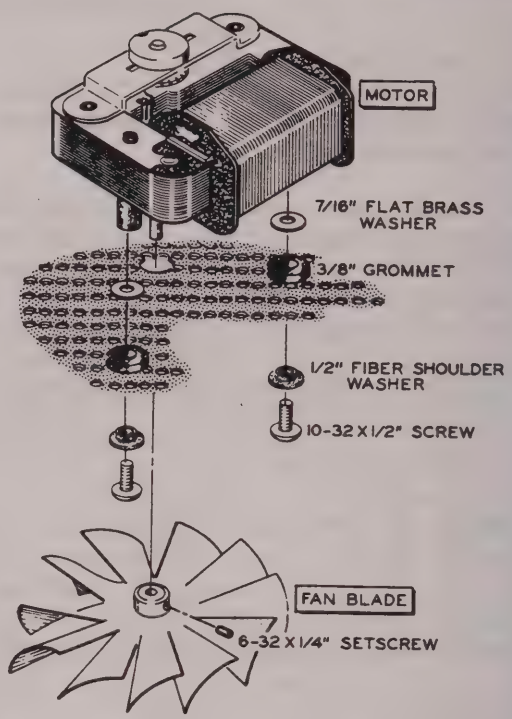

Detail 2E

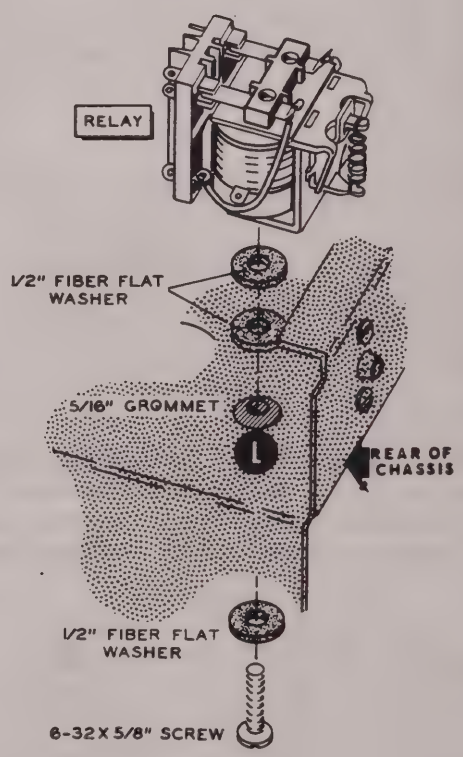

Detail 2F

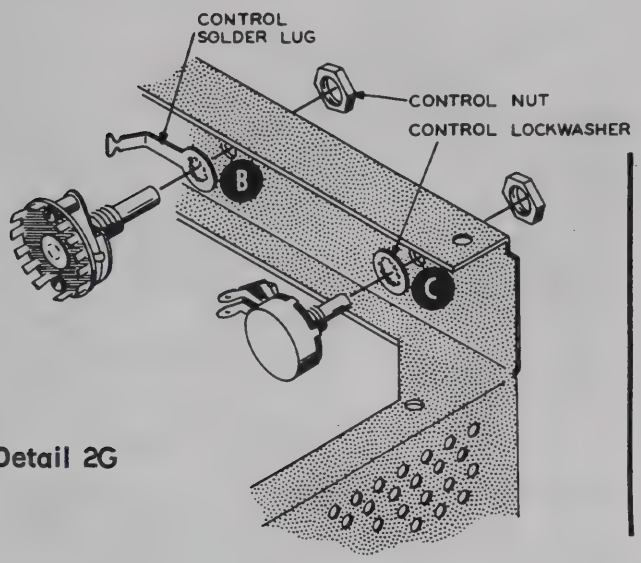

Detail 2G

( ) Refer to Detail 2G and install a 100 KΩ control (#10-12) at C, using a control lockwasher and a control nut. Position the control lugs as shown.

( ) Similarly, install the 1-wafer rotary switch (#63-352) at B. Use a control solder lug and a control nut. Position the switch lugs and solder lug as shown in the inset drawing in Pictorial 2.

NOTE: Be sure to keep the plates of the variable capacitors fully meshed (closed) at all times to prevent damage during handling.

( ) Referring to Detail 2H, install the 2-section variable capacitor (#26-97) on the top of the chassis at D. Use #6 lockwashers, 6-32 nuts and two #6 solder lugs at the locations shown.

( ) Referring to Detail 2J, install the DPST rocker switch at A. Use 6-32 x 3/8" flat head hardware. Be sure to position the switch lugs as shown. Operate the rocker switch to see that it functions properly.

( ) Install a 5/16" rubber grommet at F.

( ) Install a 1/2" rubber grommet at P.

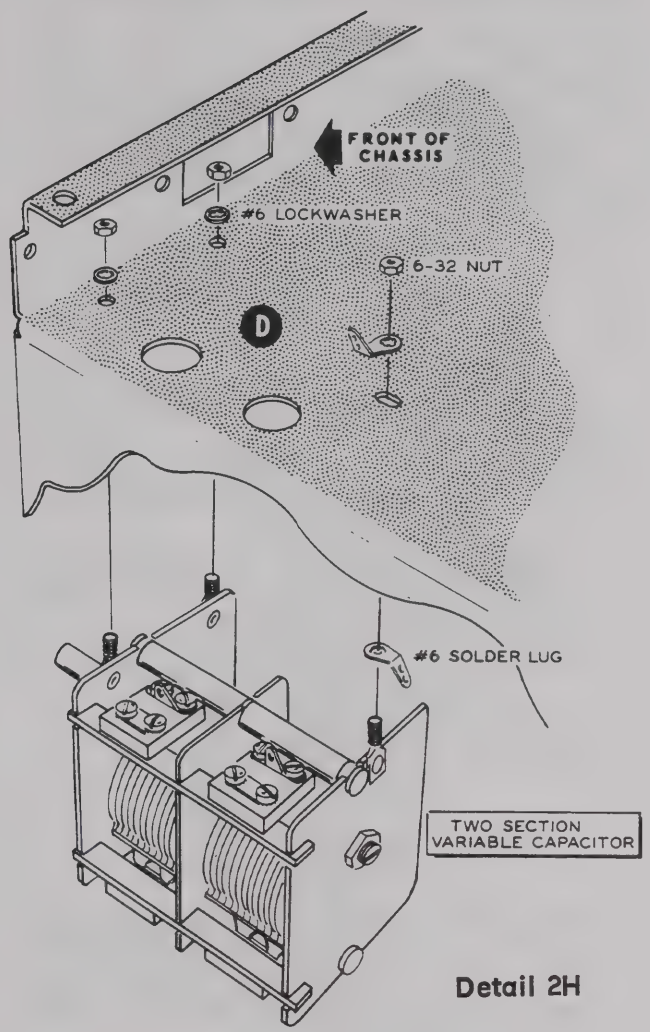

Detail 2H

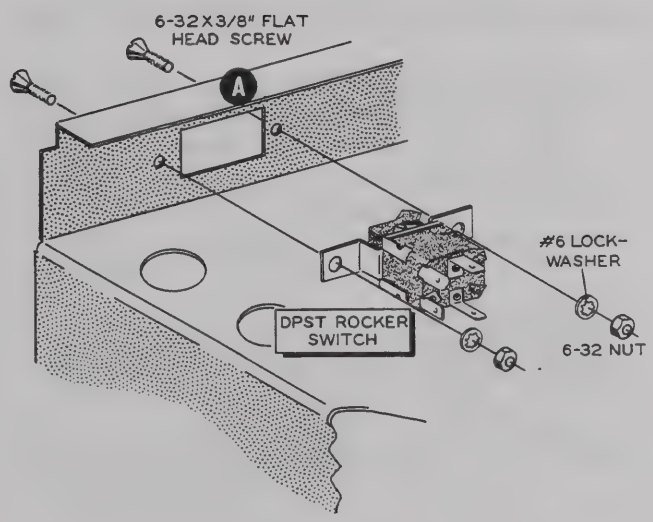

Detail 2J

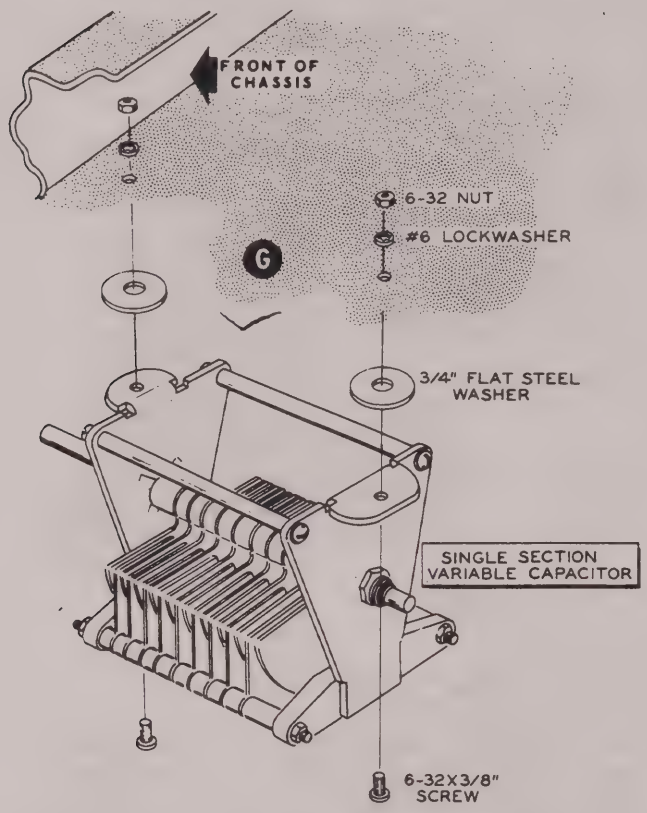

Detail 2K

( ) Install the 1-section variable capacitor (#26-96) on top of the chassis at G. Use 6-32 x 3/8" hardware with two 3/4" flat steel washers as shown in Detail 2K. Position the capacitor as shown.

Refer to Detail 2L for the following steps.

( ) Locate the power transformer and cut the leads to the following lengths. Measure the leads from where they come out of the transformer.

LEAD COLOR	LENGTH
Either green	9-1/2"
Other green	8"
Either blue	7-1/2"
Red-yellow	7"
Black-red	6"

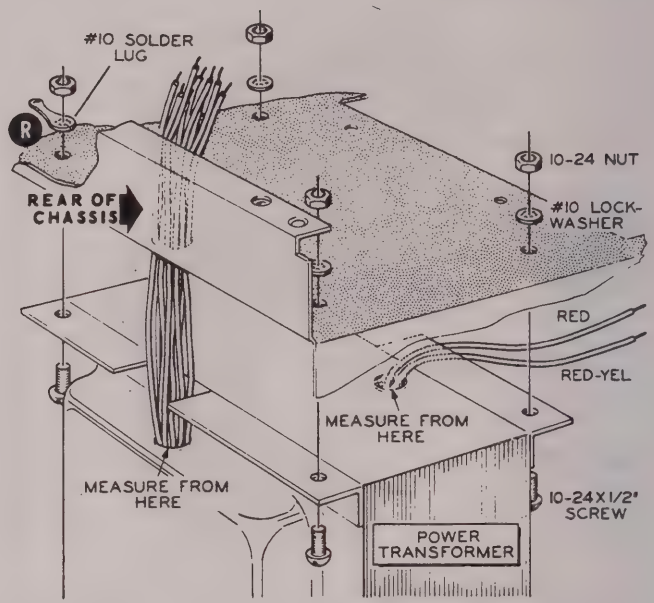

Detail 2L

LEAD COLOR	LENGTH
Black	6-1/2"
Red	5-1/2"
Other blue	3"
Black-green	3"
Black-yellow	3"
Green-yellow	3"

( ) Strip 1/4" insulation from the end of each transformer lead. Melt a small amount of solder on the exposed lead end to hold the small wire strands together.

( ) Position the power transformer as shown. Place the chassis over the top of the transformer with the red and the red-yellow leads toward the front of the chassis and the remaining leads through the large hole in the chassis as shown.

( ) Secure the power transformer to the chassis, using 10-24 x 1/2" hardware with a #10 solder lug at R.

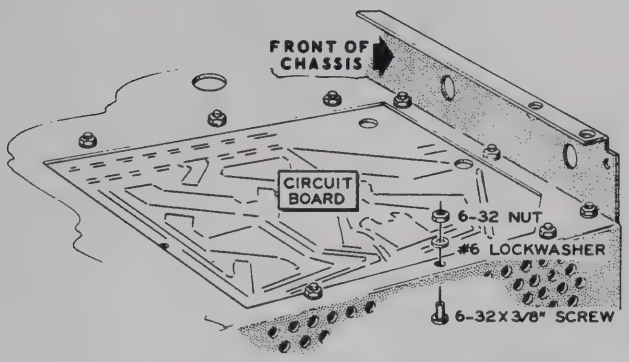

Detail 2M

( ) Referring to Detail 2M, install the circuit board on the top of the chassis, using 6-32 x 3/8" hardware. Be sure to position the circuit board as shown.

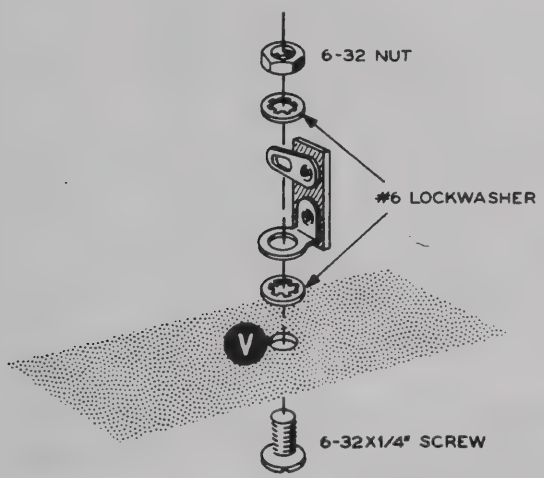

Detail 2N

( ) Referring to Detail 2N, install a 1-lug terminal strip at V, using 6-32 x 1/4" hardware. Position the terminal strip as shown.

Temporarily set the chassis aside.

PARTS MOUNTING-RF SHIELD

Refer to Pictorial 3 (fold-out from Page 21) for the following steps.

( ) Locate the RF shield and position it as shown.

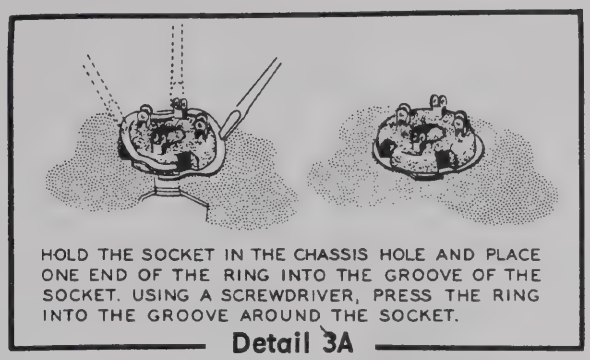
HOLD THE SOCKET IN THE CHASSIS HOLE AND PLACE ONE END OF THE RING INTO THE GROOVE OF THE SOCKET. USING A SCREWDRIVER, PRESS THE RING INTO THE GROOVE AROUND THE SOCKET.

Detail 3A

( ) Referring to Detail 3A, install 4-lug tube sockets at V1 and V2, using socket rings. Place each socket so lug 1 is positioned as shown in the Pictorial.

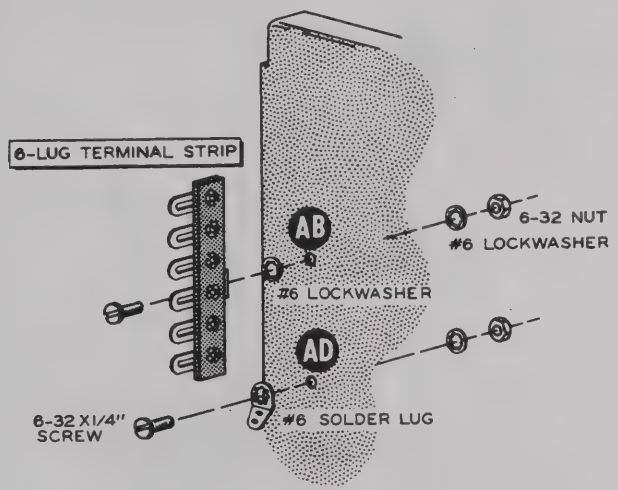

Detail 3B

( ) Refer to Detail 3B and install a 6-lug terminal strip at AB. Use 6-32 x 1/4" hardware.

( ) Install #6 solder lugs at AD and AC, using 6-32 x 1/4" hardware.

( ) Install pairs of #6 solder lugs at AE and AF, using 6-32 x 1/4" hardware. Be sure to position the solder lugs as shown in the Pictorial.

( ) Locate the 3-wafer rotary switch (#63-351) and slide the rear wafer off the switch shaft.

( ) Place a control lockwasher on the knob end of the shaft.

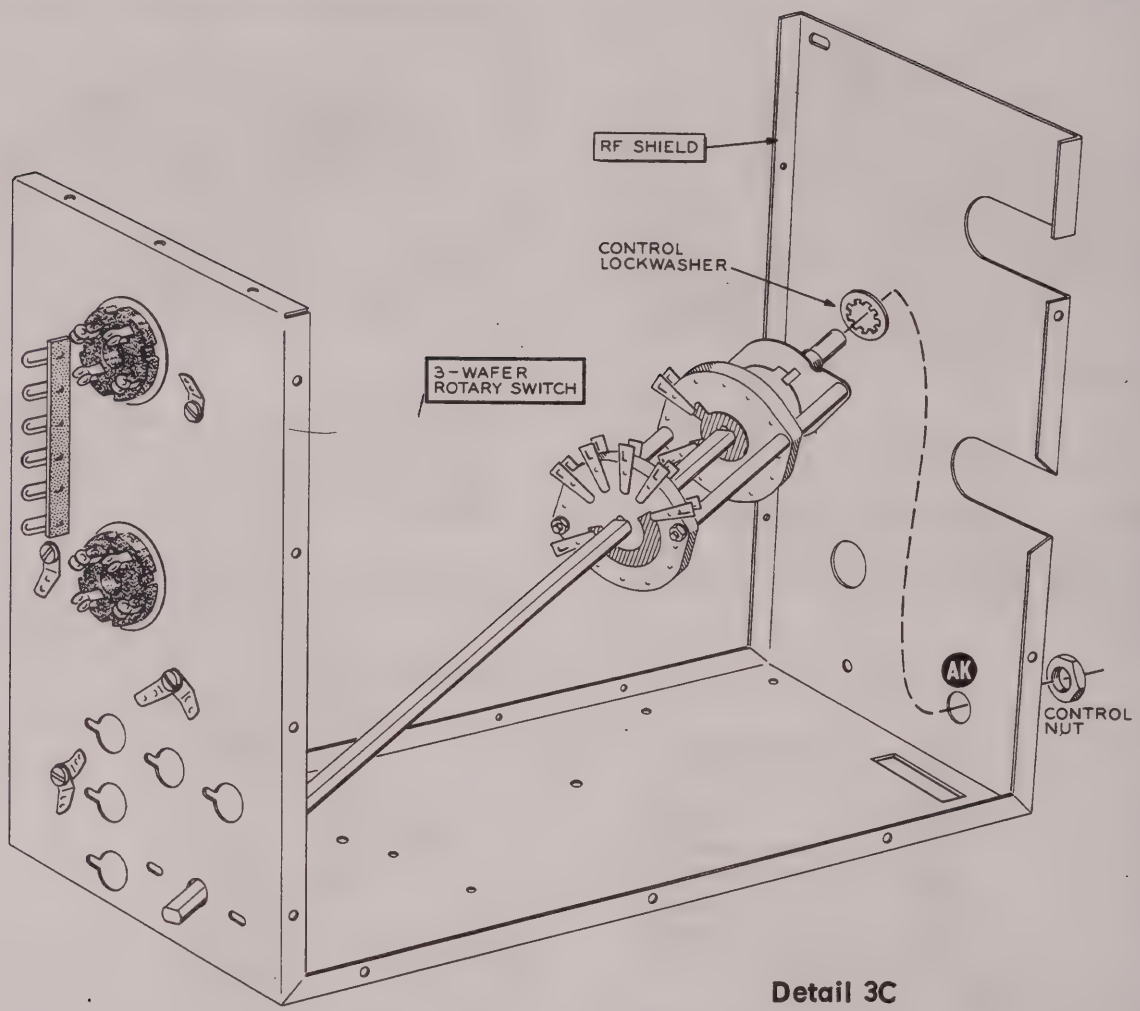

Detail 3C

( ) Referring to Detail 3C, position the switch as shown in the RF shield. Place the shaft through the hole in the rear of the bracket and then position the knob end of the switch through hole AK as shown.

( ) Temporarily secure the switch to the RF shield with a control nut. Do not tighten the control nut at this time.

( ) Turn the shaft of the switch fully counter-clockwise.

( ) Referring to Detail 3D, install the rear wafer of the switch on the bracket by removing one nut and one lockwasher from each mounting screw. This should leave one lockwasher and nut on each mounting screw. Position the movable wiper of this wafer as shown and place a 3/8" flat steel washer on each mounting screw.

( ) Secure the rear wafer of the switch to the RF shield with 3/8" flat steel washers and the switch hardware as shown. Be sure the notch of the rear wafer rotor is aligned with the notch of the rotors of the other two wafers.

( ) Now tighten the control nut securing the switch at AK.

( ) Refer to Detail 3E, and mount a #6 solder lug at AJ on the RF shield with a 6-32 x 1/4" screw and a 6-32 nut. Position the solder lug as shown.

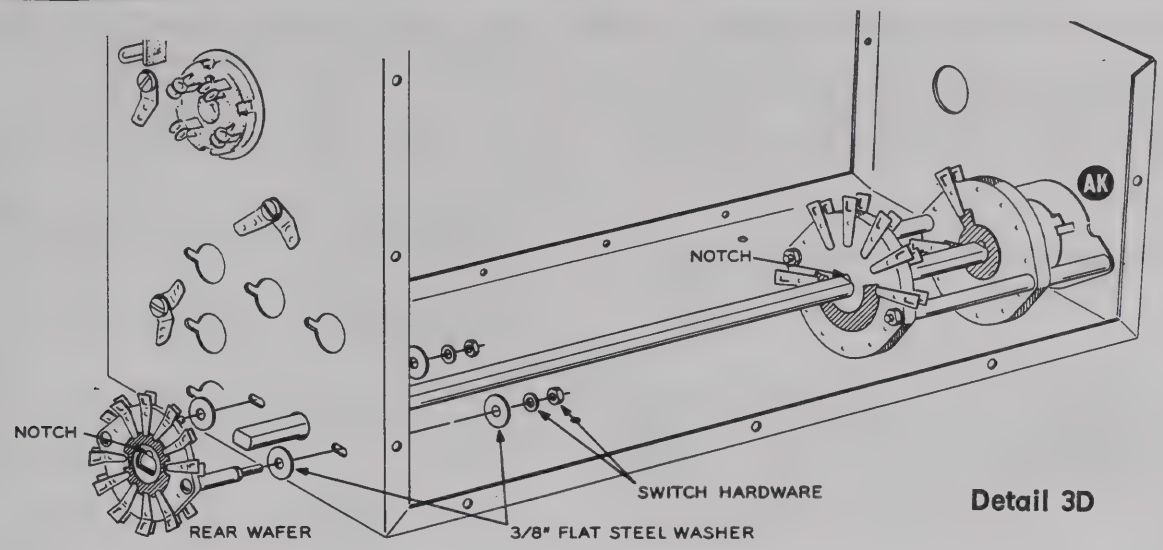

Detail 3D

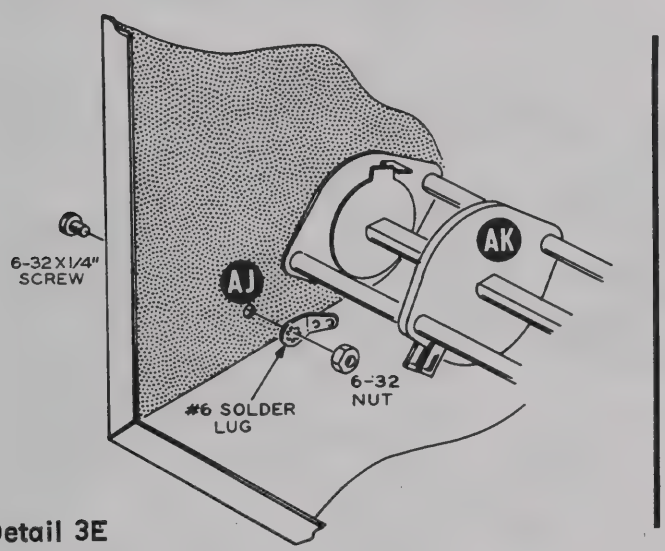

Detail 3E

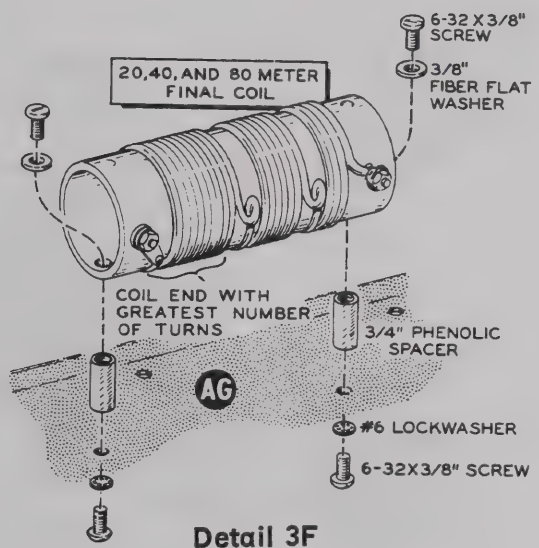

Detail 3F

Refer to Detail 3F for the following steps.

NOTE: Do not overtighten the phenolic spacers in the following steps, as the threads could strip out easily.

( ) Install 3/4" phenolic spacers to the indicated side of the 20, 40, and 80 meter final coil (#40-597). Use 6-32 x 3/8" screws and 3/8" fiber flat washers as shown.

( ) Now mount this final coil to the RF shield bracket at AG, using 6-32 x 3/8" screws and #6 lockwashers. Be sure to position the end with the most turns toward tube sockets V1 and V2.

( ) Referring to Detail 3G, install the circuit breaker mounting bracket on the RF shield, using 6-32 x 1/4" hardware with a #6 solder lug at AH.

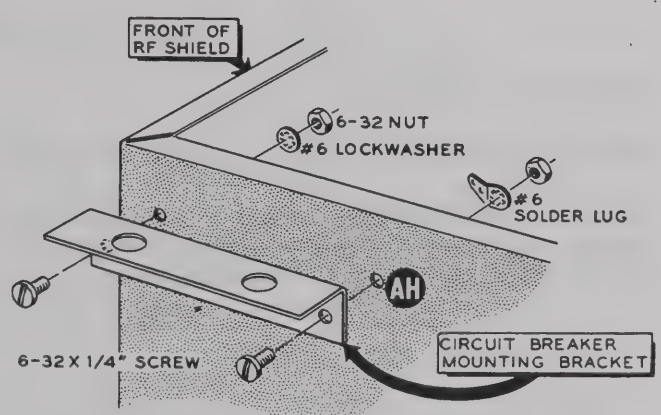

Detail 3G

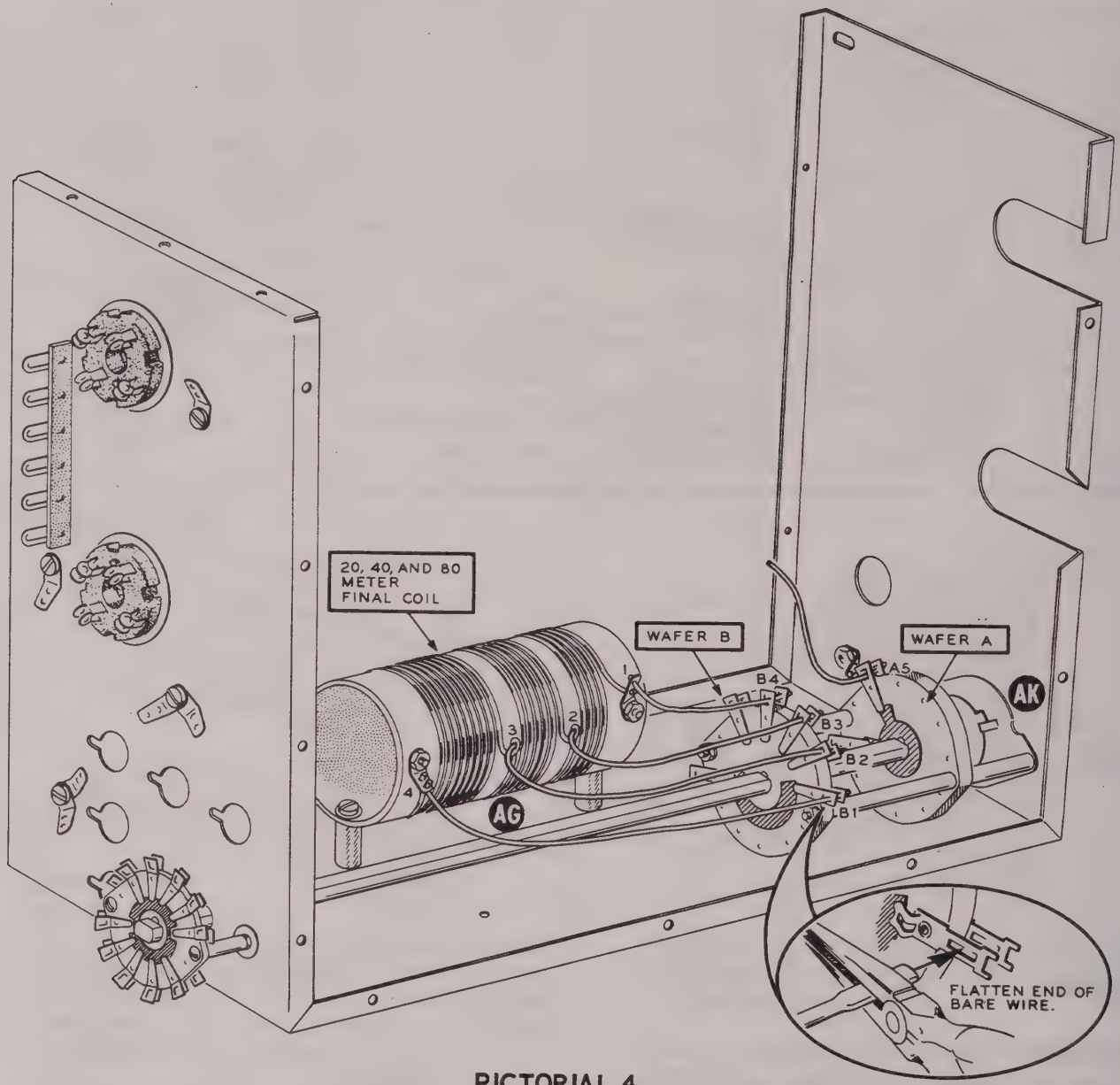

PICTORIAL 4

WIRING-RF SHIELD

Refer to Pictorial 4 for the following steps.

NOTE: The bare wire is too large to fit into the switch lugs. Therefore the end going to the switch lugs should be flattened as shown in the inset drawing of the Pictorial. Pass the wire through both lugs at each position on the switch. Do not attempt to bend this wire around the coil or switch lugs as the coil or switch could be damaged. When soldering connections at switch AK, be sure to solder both lugs at each connection.

( ) Connect a 2" bare wire from lug 1 of coil AG (S-1) to lugs B4 of switch AK (NS).

( ) Connect a 3" bare wire from lug 2 of coil AG (S-1) to lugs B3 of switch AK (S-1).

( ) Connect a 4-1/4" bare wire from lug 3 of coil AG (S-1) to lugs B2 of switch AK (S-1).

( ) Connect a 5-1/2" bare wire from lug 4 of coil AG (S-1) to lugs B1 of switch AK (NS).

( ) Connect one end of a 2" bare wire to lugs A5 of switch AK (S-1). The other end will be connected later.

Refer to Detail 4A for the following steps.

( ) Connect a 1-1/2" bare wire from solder lug AJ (S-1) to lugs A7 of switch AK (S-1).

( ) Connect a 500 $\mu\mu$f (.0005) 2 KV silver mica capacitor from solder lug AH (S-1) to lugs B7 of switch AK (S-1).

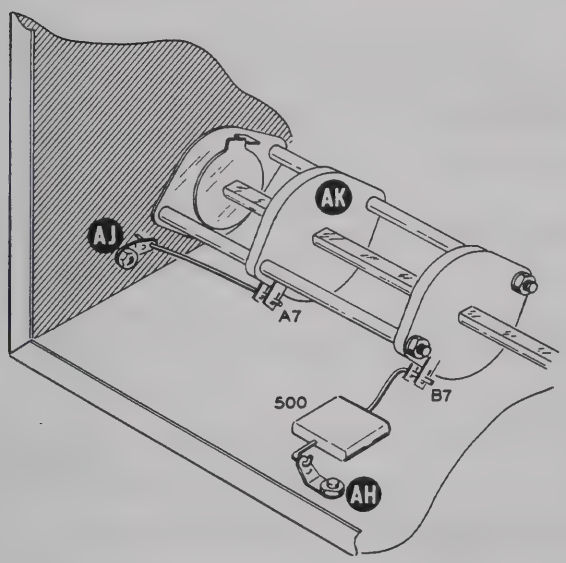

Detail 4A

Refer to Detail 4B for the following steps.

( ) Locate the 10 and 15 meter final coil (#40-596). Pass the center wire of this coil through lugs B5 of switch AK (NS).

( ) Position a tapered spacer between the RF shield and the coil.

( ) Position the end of the coil, opposite the solder lug, between lugs B4 of switch AK (S-2). It may be necessary to reshape the center wire to make the coil end fit properly between the switch lugs.

( ) Now solder lugs B5 of switch AK (S-1). Cut off any excess from the center wire.

( ) Remove the tapered spacer.

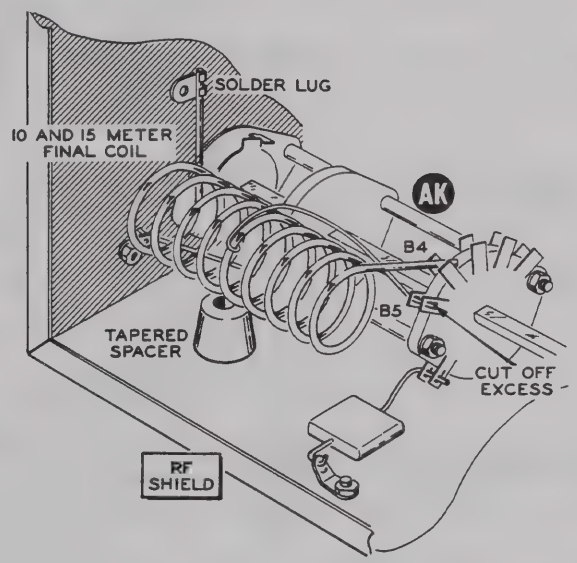

Detail 4B

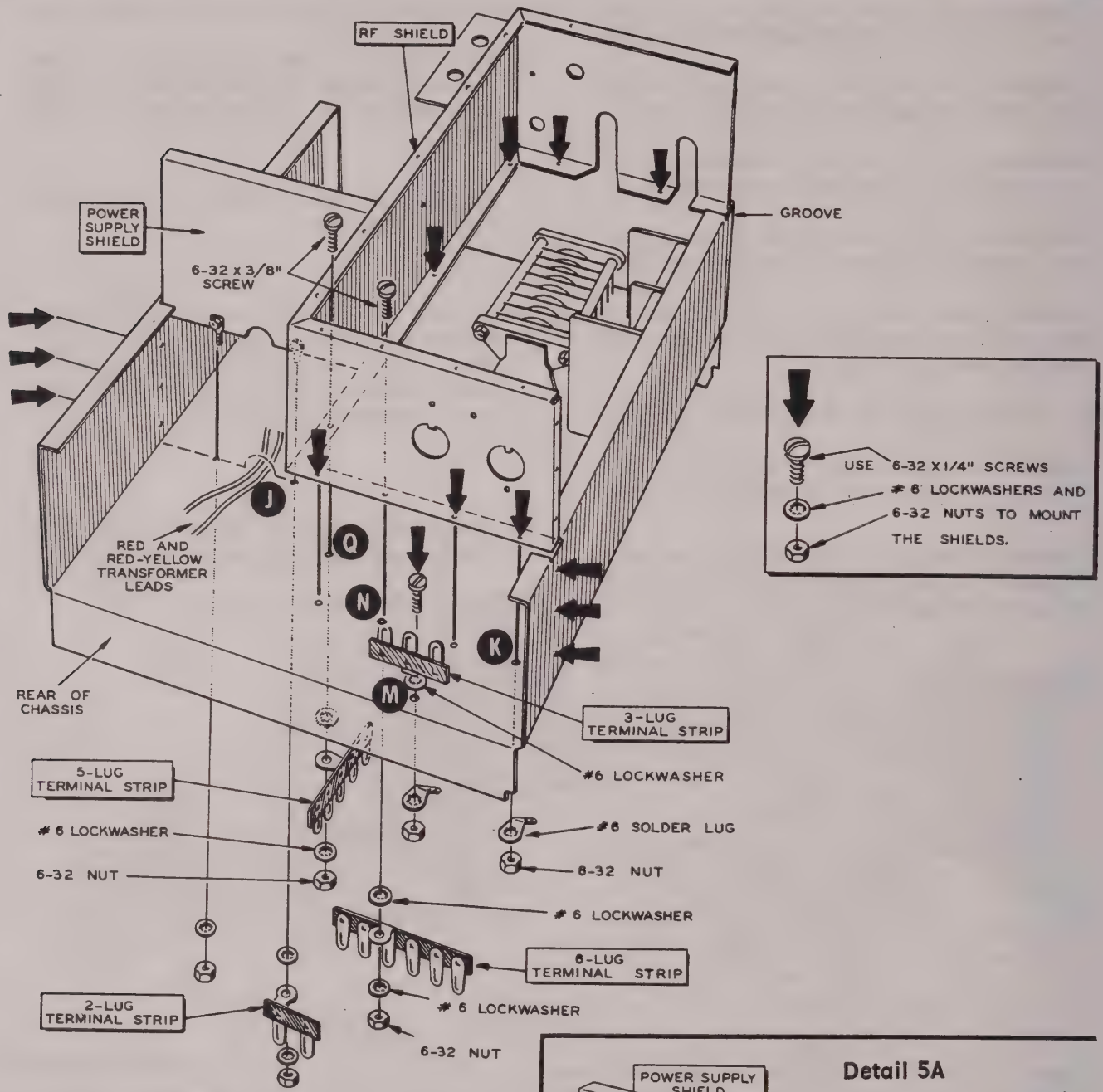

PICTORIAL 5

Refer to Detail 5A and Pictorial 5 for the following steps.

( ) Install 6-32 spade bolts on the power supply shield at the locations shown. Use 6-32 x 1/4" hardware. Position the offset in each spade bolt as shown.

( ) Install the power supply shield on the RF shield, using 6-32 x 1/4" hardware.

Detail 5A

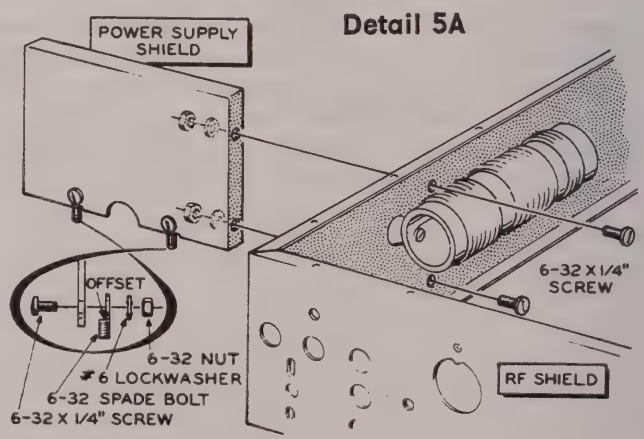

Refer to Pictorial 5 for the following steps.

( ) Position the chassis as shown and fit the RF and power supply shield assembly down on the chassis. Be sure to position the red and red-yellow power transformer leads in the notch of the power supply shield.

( ) Secure the RF shield to the chassis. Use 6-32 x 1/4" hardware at all holes indicated by the arrows, with a #6 solder lug at K.

( ) Install a 6-lug terminal strip at N and a 5-lug terminal strip at Q, using 6-32 x 3/8" hardware. It will be easier to perform this step if the chassis is tipped up on the side next to the transformer. If available, use a magnetized screwdriver to start screws in the hard-to-reach locations.

( ) Secure the power supply shield to the chassis, using 6-32 x 1/4" hardware in the holes indicated by the arrows, and #6 lockwashers and 6-32 nuts on the spade bolts with a 2-lug terminal strip at J.

( ) Install a 3-lug terminal strip at M on top of the chassis and a #6 solder lug at M on the bottom of the chassis. Use 6-32 x 1/4" hardware.

WIRING-CHASSIS BOTTOM

Refer to Pictorial 6 (fold-out from Page 22) for the following steps.

( ) Position the two green power transformer leads through grommet P for connection later.

Connect the remaining power transformer leads as follows:

( ) Black-green to lug 2 of terminal strip S (S-1).

( ) Black-yellow to lug 3 of terminal strip S (NS).

( ) Green-yellow to ground lug 8 of terminal strip S (NS).

( ) Shorter blue to ground lug 8 of terminal strip S (NS).

( ) Longer blue to lug 5 of terminal strip Q (NS).

( ) Black to lug 4 of terminal strip Q (NS).

( ) Black-red to lug 2 of terminal strip Q (NS).

( ) Position the transformer leads as shown.

NOTE: Use the small solid hookup wire in all wiring steps, unless directed otherwise. Cut the specified color of wire to the length given in the step. Then strip 1/4" of insulation from each wire end, unless directed otherwise.

( ) Strip 1/2" of insulation from one end and 1/4" of insulation from other end of a 4-1/4" gray wire.

( ) At the end of this wire with the most insulation removed, pass the wire through lug 10 (S-2) to lug 9 (S-1) of switch B. Connect the other end of the wire to lug 2 of control C (S-1).

( ) Connect a 2-1/2" gray wire from lug 13 of switch B (S-1) to lug 3 of control C (S-1).

( ) Strip 2-3/4" of insulation from one end and 1/4" of insulation from the other end of a 5" gray wire.

( ) At the end with the most insulation removed, pass the wire through lug 3 (S-2), through lug 4 (S-2), through lug 5 (S-2), and through lug 8 (S-2) of switch B to the control solder lug (NS). Connect the other end of the wire to lug 1 of control C (S-1). Be sure the bare portion of the wire does not touch any other lugs or the switch assembly bolt.

( ) Connect one end of a 9" gray wire to lug 6 of switch B (S-1). Pass the other end through hole H in the circuit board for connection later.

( ) Connect one end of a 7" red wire to lug 12 of switch B (S-1). Pass the other end through hole H in the circuit board for connection later.

( ) Connect one end of a 4" yellow wire to lug 2 of switch B (S-1). Pass the other end through hole H in the circuit board for connection later.

( ) Connect a 4-3/4" yellow wire from lug 2 of terminal strip N (NS) to lug 4 of relay L (S-1).

( ) Connect a 4" yellow wire from lug 5 of terminal strip N (NS) to lug 3 of relay L (NS).

( ) Connect a 3" yellow wire from lug 6 of terminal strip N (NS) to the lug of terminal strip V (NS).

( ) Connect one end of a 7" green wire to lug 1 of terminal strip N (NS). Pass the other end through grommet P for connection later.

( ) Referring to the inset drawing of Pictorial 6, connect one end of a 10" large blue wire to the diode lead (point A) extending from the circuit board (S-1). Pass the other end through grommet F for connection later. Cut off the excess diode lead.

( ) Locate the cable assembly and position it on the chassis as shown.

Connect the wires from BO (Breakout) #1 to switch A as follows:

( ) Shorter red to lug 1 (S-1).

( ) Longer red to lug 2 (S-1).

( ) Shorter black to lug 3 (S-1).

( ) Longer black to lug 4 (S-1).

( ) Pass all the wires from BO#2, except the blue, green, yellow, and the two shielded cables, down through hole H in the circuit board for connection later.

Connect the wires from BO#2 to switch B as follows:

( ) Green to lug 1 (S-1).

( ) Yellow to lug 7 (S-1).

NOTE: When soldering the shielded cable connections, do not overheat the connection as the insulation on the inner conductor will melt and permit a short to the shield. It may be easier to make these connections if the switch nut is loosened and the switch turned temporarily. Return the switch to the proper position after the connections are soldered.

( ) Inner lead of the unmarked shielded cable to lug 15 (S-1) and the shield to the control solder lug (NS).

( ) Inner lead of the shielded cable with red band to lug 14 (S-1) and the shield to the control solder lug (S-3).

( ) Blue to lug 11 (S-1).

( ) Connect the blue wire from BO#3 to lug 2 of terminal strip J (NS).

Connect the wires from BO#4 to terminal strip Q as follows:

( ) Red to lug 2 (S-2).

( ) Both black to lug 4 (S-3).

( ) Inner lead from the shielded cable to lug 1 (NS) and the shield to lug 3 (NS).

Connect the following wires from BO#5 to terminal strip S.

( ) Yellow to lug 7 (NS).

( ) Red to lug 4 (NS).

( ) Small black to lug 3 (S-2).

( ) Large black to lug 1 (NS).

( ) Violet to lug 6 (NS).

( ) Pass the violet, gray, brown, and white wires from BO#6 through grommmet P for connection later.

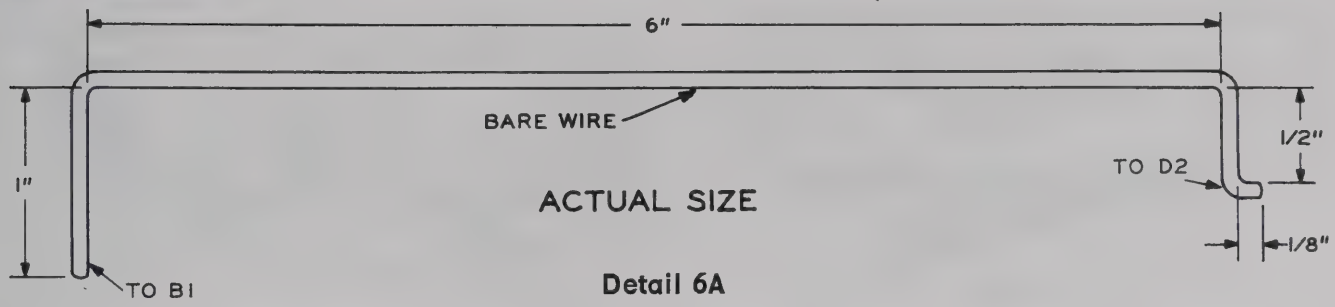

Detail 6A

Connect the following wires from BO#6 to terminal strip N.

( ) Inner lead of the shielded cable to lug 3 (NS) and the shield to lug 4 (NS).

( ) Both yellow to lug 2 (NS).

( ) Green to lug 1 (NS).

( ) Twist together the two black wires from BO#6 as shown. Connect either wire to position 1 (S-1) and the other to position 2 (S-1) on the motor. Pass the wire ends through the holes in the coil form and solder them directly to the solder connections on the motor.

( ) Referring to Detail 6A, bend a length of bare wire to the shape shown. The Detail is full-size and may be used as a pattern.

( ) Connect this formed bare wire from lugs B1 of switch AK (S-2) to lug 2 of variable capacitor D (S-1).

( ) Referring to Detail 6B, bend a length of bare wire to the shape shown. The Detail is full-size and may be used as a pattern.

( ) Connect this formed bare wire from the bare wire near lug 2 of variable capacitor D (S-1) to lug 1 of variable capacitor D (S-1). Bend lug 1 of D as shown.

CAUTION: Be sure the bare wires just installed do not touch the chassis.

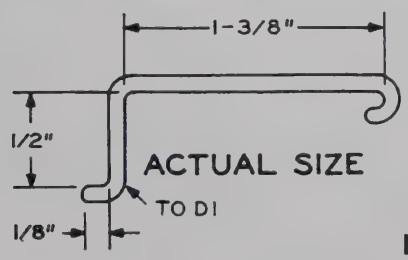

Detail 6B

( ) Referring to Detail 6C, prepare a 9-1/2" length of large (RG-58A/U) shielded cable.

( ) At either end of the prepared cable, connect the inner lead to lug 7 of relay L (S-1) and the shield to solder lug K (NS).

( ) At the other end of the cable, connect the inner lead to the bare wire near lug 2 of variable capacitor D (S-1) and the shield to solder lug E (NS), as shown.

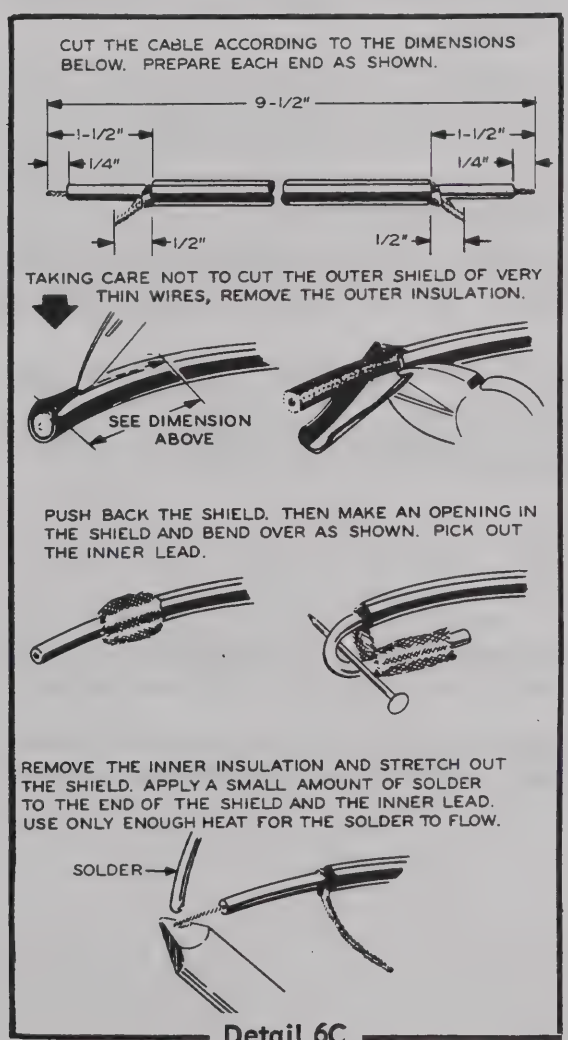
CUT THE CABLE ACCORDING TO THE DIMENSIONS BELOW. PREPARE EACH END AS SHOWN.
9-1/2"
1-1/2"
1-1/2"
1/4"
1/4"
1/2"
1/2"
TAKING CARE NOT TO CUT THE OUTER SHIELD OF VERY THIN WIRES, REMOVE THE OUTER INSULATION.
SEE DIMENSION ABOVE
PUSH BACK THE SHIELD. THEN MAKE AN OPENING IN THE SHIELD AND BEND OVER AS SHOWN. PICK OUT THE INNER LEAD.
REMOVE THE INNER INSULATION AND STRETCH OUT THE SHIELD. APPLY A SMALL AMOUNT OF SOLDER TO THE END OF THE SHIELD AND THE INNER LEAD. USE ONLY ENOUGH HEAT FOR THE SOLDER TO FLOW.
SOLDER

Detail 6C

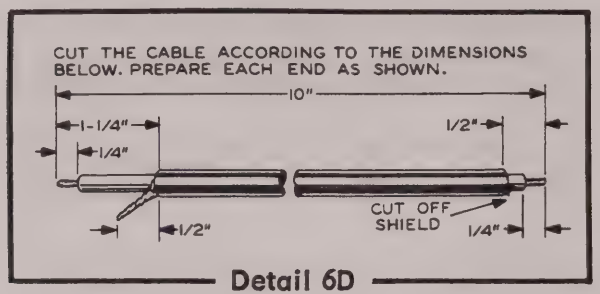

Detail 6D

( ) Referring to Detail 6D, prepare a 10" length of large (RG-58A/U) shielded cable.

( ) At the end of the prepared cable with the shield, connect the inner lead to lug 8 of relay L (S-1) and the shield to solder lug K (S-2).

( ) Pass the other end of the cable behind relay L and through grommet P for connection later.

( ) Connect the 1.1 mh RF choke (#45-4) from the bare wire connected between lug B1 of switch AK and lug 2 of variable capacitor D (S-1), to solder lug E (S-2). Position the choke as shown.

( ) Connect a .02 μfd disc capacitor between lugs 3 (NS) and 4 (NS) of terminal strip N.

Refer to Pictorial 7 for the following steps.

NOTE: All resistors are 1/2 watt, unless specified otherwise.

( ) Connect a 4700 Ω (yellow-violet-red) resistor from lug 1 of phono socket Z (NS) to lug 6 of terminal strip S (S-2).

( ) Connect a .02 μfd disc capacitor between lugs 1 (S-2) and 2 (S-1) of phono socket Z.

( ) Connect a .02 μfd disc capacitor between lugs 1 (NS) and 2 (S-1) of phono socket Y.

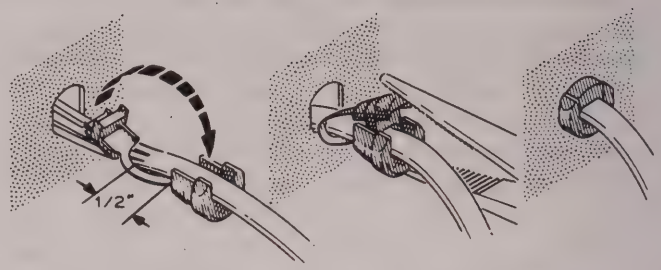

Detail 7A

( ) Connect a .005 μfd 1.4 KV disc capacitor between lugs 5 (NS) and 1 (NS) of terminal strip S.

( ) Connect a .005 μfd 1.4 KV disc capacitor between lugs 4 (NS) and 8 (S-3) of terminal strip S.

( ) Locate the line cord and separate the three leads for 4".

( ) Referring to Detail 7A, install the line cord in the large hole in the rear corner of the chassis. Use the line cord strain relief. Position the strain relief approximately 1/2" from the point where the wires separate.

Connect the leads of the line cord to terminal strip S as follows. Cut each lead to the required length to reach its connecting point.

( ) Green to lug 5 (S-2).

( ) Either gray to lug 1 (S-3).

( ) Other gray to lug 4 (S-3).

( ) Connect a 33 Ω 1 watt (orange-orange-black) resistor from lug 1 of phono socket Y (S-2) to lug 7 of terminal strip S (S-2).

( ) Connect a .02 μfd disc capacitor between lugs 1 (NS) and 3 (NS) of terminal strip Q.

( ) Connect the positive (+) lead of a 20 μfd electrolytic capacitor to lug 3 of terminal strip Q (S-3) and the other lead to lug 5 of terminal strip N (NS). Use small sleeving on the lead to terminal strip N.

NOTE: WHEN INSTALLING SILICON DIODES, THE CATHODE END SHOULD BE PLACED AS DIRECTED. THE CATHODE END IS MARKED WITH EITHER A COLOR END, COLOR DOT OR COLOR BAND. IN THE ILLUSTRATION, THE SYMBOL K INDICATES THE CATHODE END.

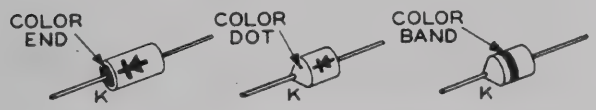

Detail 7B

( ) Referring to Detail 7B, connect the lead from the cathode end of a silicon diode (large body) to lug 6 (S-2) and the other lead to lug 5 (NS) of terminal strip N.

( ) Connect the positive (+) lead of a 2 μfd electrolytic capacitor to lug 4 (NS) and the other lead to lug 2 (NS) of terminal strip N.

( ) Connect a 10 KΩ (brown-black-orange) 2 watt resistor between lugs 4 (S-4) and 5 (S-4) of terminal strip N.

( ) Connect a 1.5 Ω (brown-green-gold-silver) resistor between lugs 2 (NS) and 1 (S-3) of terminal strip N.

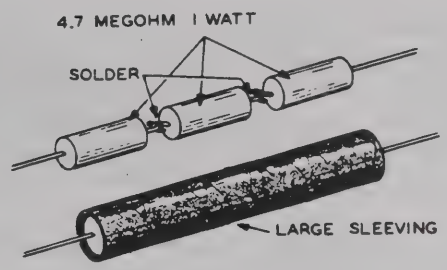

Detail 7C

( ) Referring to Detail 7C, prepare a resistor combination, using three 4.7 megohm (yellow-violet-green) 1 watt resistors and the large sleeving.

( ) Connect this resistor combination from lug 2 of terminal strip J (NS) to point B on the foil of the circuit board. Solder the lead directly to the foil. Use sleeving on the lead to the circuit board.

( ) Connect a 15 KΩ (brown-green-orange) resistor between lugs 1 (S-1) and 2 (S-3) of terminal strip J.

This Linear Amplifier may be operated from either 120 volts or 240 volts AC. Perform one of the following two steps, depending on the line voltage to be used. Refer to the inset drawing on Pictorial 7.

( ) For 120 volt AC operation, connect one bare wire under screws 1 and 2, and another bare wire under screws 3 and 4 of terminal strip S.

( ) For 240 volt AC operation, connect a bare wire under screws 2 and 3 of terminal strip S.

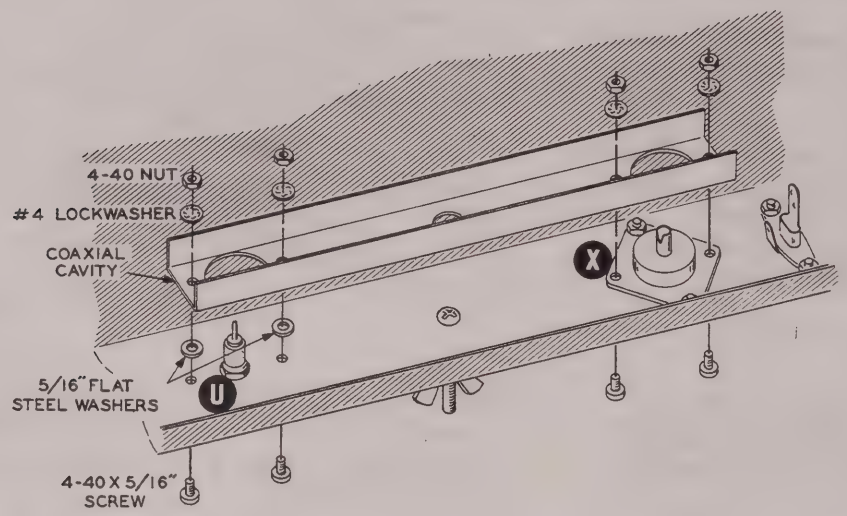

Detail 8A

WIRING-SWR BRIDGE

NOTE: Position the chassis on the rear apron for the following steps.

( ) Referring to Pictorial 8 and Detail 8A, install the coaxial cavity, using 4-40 x 5/16" hardware and two 5/16" flat steel washers. Be sure no wires are pinched between the cavity and the chassis.

Refer to Pictorial 8 and Detail 8B for the following steps.

( ) Slide the three plastic spacers on the RF driver element. Be sure the two small holes in each spacer are position correctly. Position the spacers approximately as shown.

( ) Insert the two RF pickup elements through the plastic spacers as shown.

( ) Position this assembly in the coaxial cavity with a 3/16" spacer on coax socket X.

( ) Referring to the inset drawing of Detail 8B, solder the RF driver element to coax socket X (S-1) and standoff U (S-1).

( ) Referring to the inset drawing on Pictorial 8, cut the flexible lead at lug 10 of relay L. Cut the lead as close to the lug as possible.

( ) Carefully remove the sleeving from this lead. Then cut the lead to 1-1/4" and the sleeving to 1" in length. Replace the sleeving on the lead.

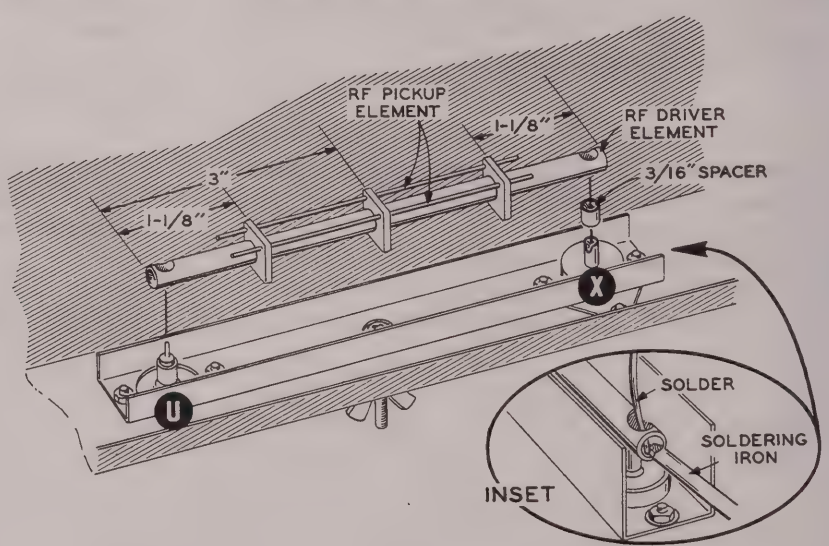

Detail 8B

( ) Connect this lead to lug 1 of phono socket T (S-1).

( ) In a like manner, cut the flexible lead at lug 9 of relay L.

( ) Remove the sleeving from this lead. Then cut the lead to 1-1/4" and the sleeving to 1" in length. Replace the sleeving on this lead.

( ) Connect the end of this lead in the hole at 5 of the RF driver element (S-1).

( ) Connect a 1-1/2" bare wire between lugs 5 (S-1) and 6 (S-1) of relay L. Be sure this wire is positioned below the top edge of the relay so it will not short to the cabinet later.

NOTE: When soldering leads to the RF pickup elements in the next four steps, slide the plastic spacer away from the area being soldered. Then, reposition the spacer after the connection has cooled to prevent melting the spacers. Be sure to connect the component leads to the proper RF pickup element.

( ) Connect a 100 Ω (brown-black-brown) resistor from #1 on the RF pickup element (S-1) to solder lug R (S-1). Connect the resistor lead at the very end of the RF pickup element. Position the resistor as shown.

CAUTION: When soldering the leads of the small silicon and crystal diodes, grip the lead between the connection and the body of the diode with a pair of long-nose pliers. This will protect the diodes from heat damage. By placing a rubber band around the handles of the pliers and clipping the pliers onto the diode lead, you will have both hands free for soldering.

( ) Cut both leads of a crystal diode (brown-white-brown) to 1/2". Connect the cathode (color band end) lead to lug 1 of terminal strip Q (S-3) and the other lead at #2 of the RF pickup element (S-1). Be sure the diode lead is positioned 5/8" from the end of the RF pickup element.

( ) Connect a 100 Ω (brown-black-brown) resistor from #4 of the RF pickup element (S-1) to the solder lug M (S-1). Connect the resistor lead at the very end of the RF pickup element. Position the resistor as shown.

( ) Cut both leads of a crystal diode (brown-white-brown) to 5/8". Connect the cathode (color band end) lead to lug 3 of terminal strip N (S-3) and the other lead at #3 of the RF pickup element (S-1). Be sure the diode lead is positioned 5/8" from the end of the RF pickup element.

( ) Connect a 465 Ω 15 watt resistor from lug 5 of terminal strip Q (S-2) to the lug of terminal strip V (S-2).

( ) Connect a 2000 Ω 7 watt resistor from lug 2 of terminal strip N (S-6) to lug 3 of relay L (S-2). Position the body of the resistor down against the chassis.

( ) Referring to Detail 8C, install the angle brackets, using 6-32 x 3/8" flat head hardware.

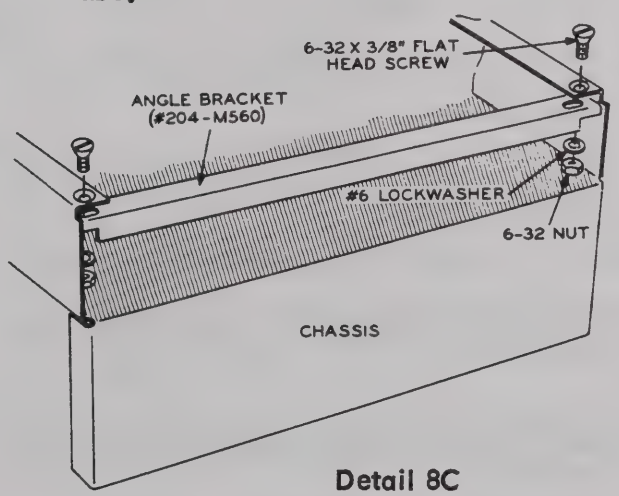

Detail 8C

( ) Remove the protective backing from a DANGER label and press it firmly in place on the underside of the chassis as shown.

This completes the wiring under the chassis. Check to see that all connections are soldered. Shake out any wire clippings and solder splashes.

WIRING-CHASSIS TOP

Refer to Pictorial 9 for the following steps.

Connect the power transformer leads to the circuit board as follows:

( ) Red to RED (S-1).

( ) Red-yellow to RED-YEL (S-1).

Connect the wires extending from hole H of the circuit board as follows:

( ) Short gray coming from the cable assembly to hole D of the circuit board (S-1).

( ) Yellow coming from switch B to hole C of the circuit board (S-1).

NOTE: The circuit breakers will be mounted after they are wired.

( ) Either large black coming from the cable assembly to lug 1 of a circuit breaker (S-1).

( ) Other large black to lug 2 of this circuit breaker (S-1).

( ) Either large red coming from the cable assembly to lug 1 of the other circuit breaker (S-1).

( ) Other large red to lug 2 of this circuit breaker (S-1).

Refer to Detail 9A for the following steps.

( ) Remove the round nut from both circuit breakers.

( ) Adjust the hex nut so it is 3/16" from the end of the threaded bushing on each circuit breaker.

( ) Install the circuit breaker with the black wires connected to it, at AM on the circuit breaker mounting bracket. Use the round nut removed from the circuit breaker. Be sure the wide space is between the circuit breaker lug and the bracket.

( ) In a like manner, install the circuit breaker with the red wires connected to it at AL of the circuit breaker bracket. Again position the wide space between the lug and bracket.

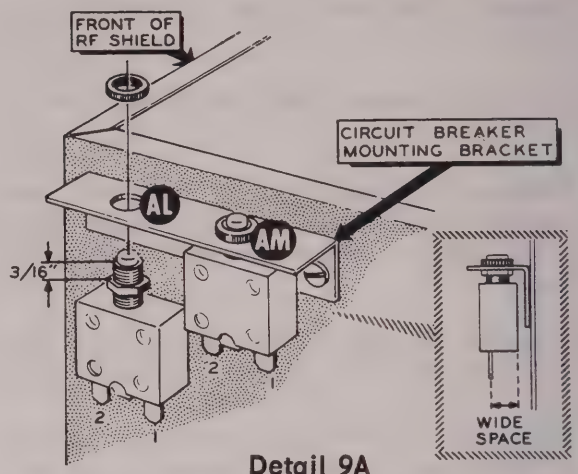

Detail 9A

( ) Fit the solder lug on the end of the 10 and 15 meter final coil on the bolts at #1 of the variable capacitor G. This coil will be secured later.

( ) Locate the 100 $\mu\mu$f tubular capacitor and mount a #6 solder lug with a 6-32 x 3/16" screw to one end of this capacitor as shown in Detail 9B.

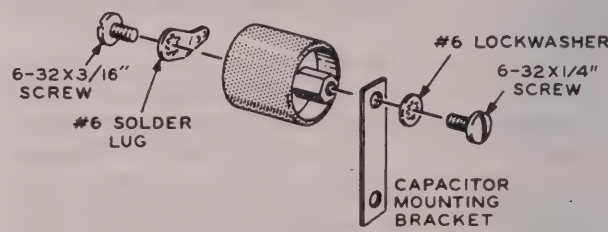

Detail 9B

( ) Now mount this capacitor to the capacitor mounting bracket, using a 6-32 x 1/4" screw and a #6 lockwasher as shown in Detail 9B.

( ) Place the capacitor mounting bracket on the bolt at #1 of variable capacitor G. Secure it and the final coil mounted previously with a #6 lockwasher and a 6-32 nut.

( ) Connect the end of the wire coming from lugs A5 of switch AK to the lug of the 100 $\mu\mu$f tubular capacitor mounted on lug 1 of variable capacitor G (S-1).

( ) Thread a 1000 $\mu\mu$f tubular ceramic capacitor onto the bolt at #2 of variable capacitor G.

( ) Install a #6 solder lug at AP on the tubular ceramic capacitor, using a 6-32 x 3/16" screw. Position the solder lug as shown.

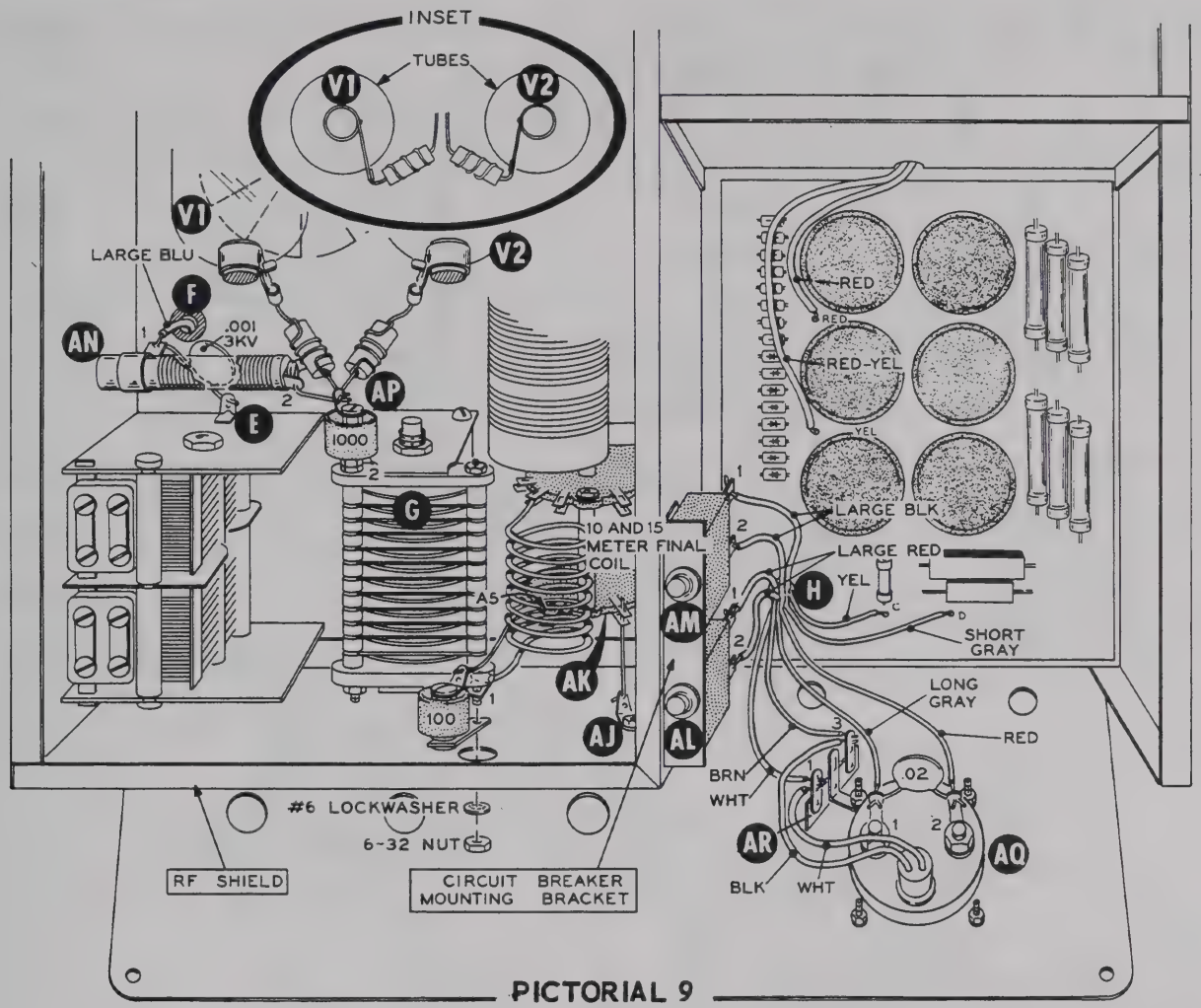

PICTORIAL 9

( ) Cut both leads of a .001 μfd 3 KV disc capacitor to 1/2" in length.

( ) Connect one lead of this capacitor to solder lug E (S-1). The other lead will be connected later.

( ) Referring to Detail 9C, install the 50 μh RF choke (#45-61) at AN, using a 6-32 x 3/8" screw and a 1/2" fiber flat washer.

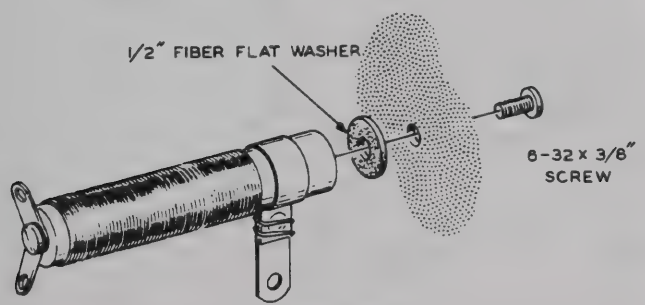

Detail 9C

( ) Connect the lead of the .001 μfd disc capacitor coming from solder lug E to lug 1 of RF choke AN (NS).

( ) Connect the end of the large blue wire coming from grommet F to lug 1 of RF choke AN (S-2).

( ) Connect a 1-1/4" bare wire from lug 2 of RF choke AN (S-1) to solder lug AP (NS).

( ) Referring to Detail 9D, prepare two anode clip and RF choke combinations. Use anode clips and parasitic RF chokes (#45-53) as shown.

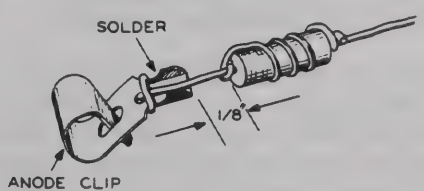

Detail 9D

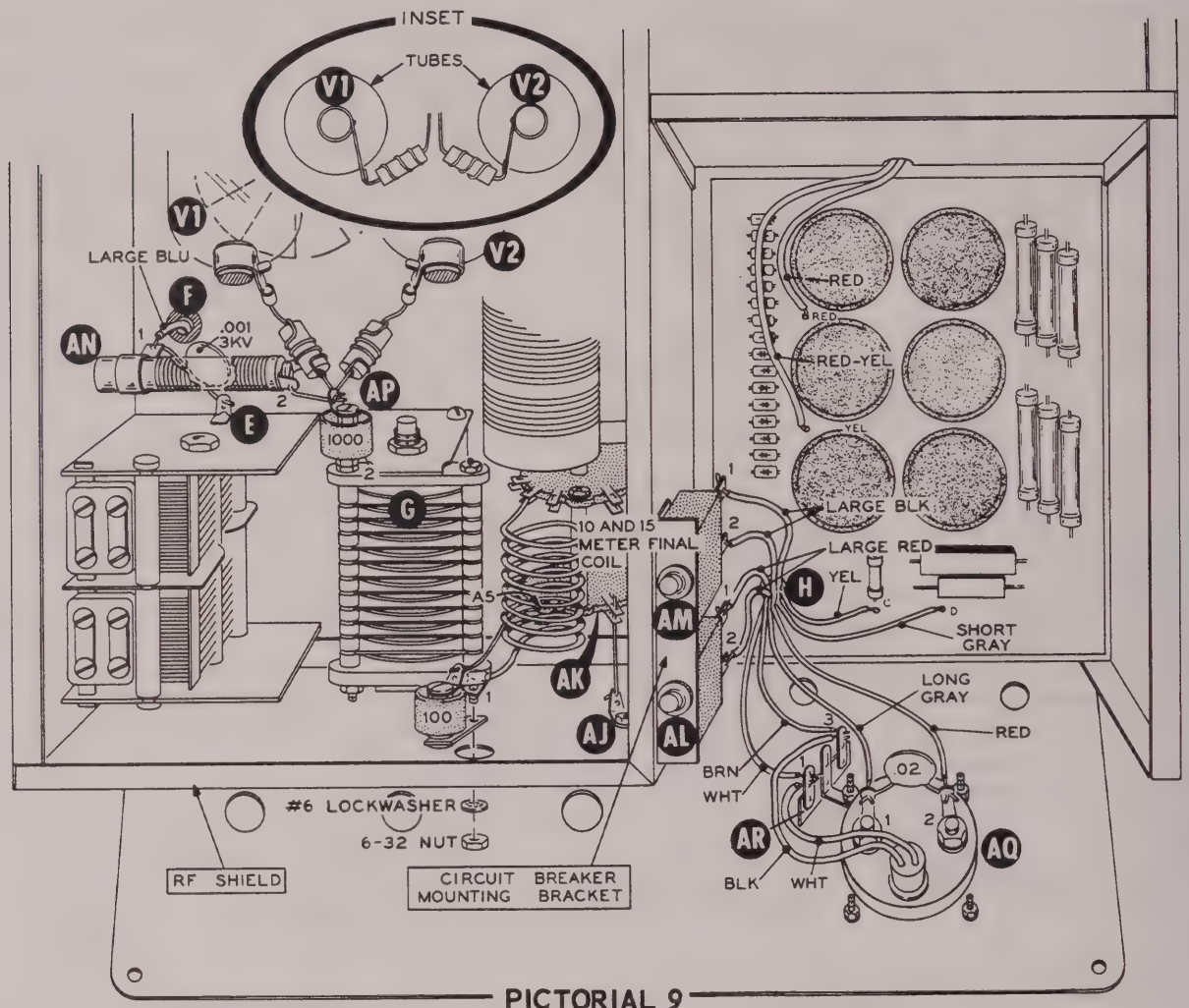

PICTORIAL 9
(Repeat)

( ) Install the 572-B or T160-L tubes in tube sockets V1 and V2.

( ) Install an anode clip and RF choke combination on the cap of each tube as shown in the inset drawing in Pictorial 9.

( ) Connect the free choke lead of one of these combinations to solder lug AP (NS). Position the combination as shown.

( ) Connect the free choke lead of the other combination to solder lug AP (S-3). Position the combination as shown.

( ) Referring to Detail 9E, install the meter at AQ on the front panel with a 3-lug terminal strip at AR. Use a #6 lockwasher plus the lockwashers and nuts supplied with the meter. Bend the lugs of the meter upward, as shown.

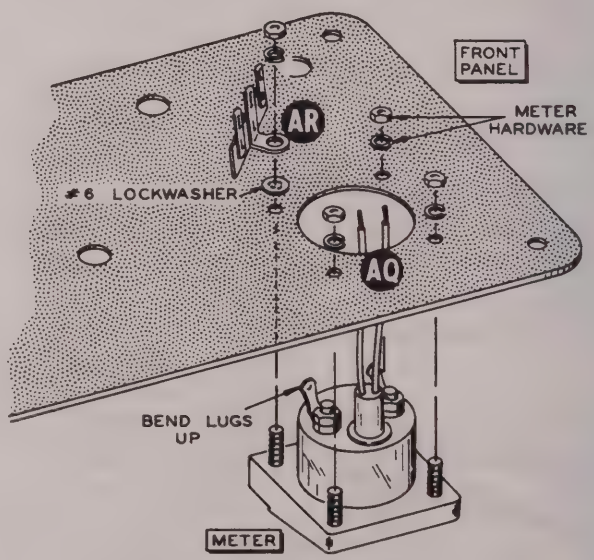

Detail 9E

( ) Remove the shorting clip from between the meter lugs.

( ) Connect a .02 μfd disc capacitor between lugs 1 (NS) and 2 (NS) of meter AQ.

( ) Remove the control nuts from B, C, and AK.

( ) Position the front panel in front of the chassis.

Connect the wires extending from hole H of the circuit board as follows:

( ) Red to lug 2 of meter AQ (S-2).

( ) Long gray to lug 1 of meter AQ (S-2).

( ) White to lug 1 of terminal strip AR (NS).

( ) Brown to lug 3 of terminal strip AR (NS).

( ) Connect the white lead from the meter pilot lamp socket to lug 1 of terminal strip AR (S-2).

( ) Connect the black lead from the meter pilot lamp socket to lug 3 of terminal strip AR (S-2).

( ) Referring to Detail 9F, install the front panel on the chassis, using a control lockwasher, control flat washer, and a control nut at AK, with control flat washers and control nuts at B and C. Do not tighten the nuts at this time.

( ) Secure the four corners of the front panel to the chassis, using 6-32 x 3/8" phillips head hardware. Do not tighten at this time.

( ) Now center the front panel so the rocker switch works freely. Tighten the three control nuts and the hardware at the corners of the front panel.

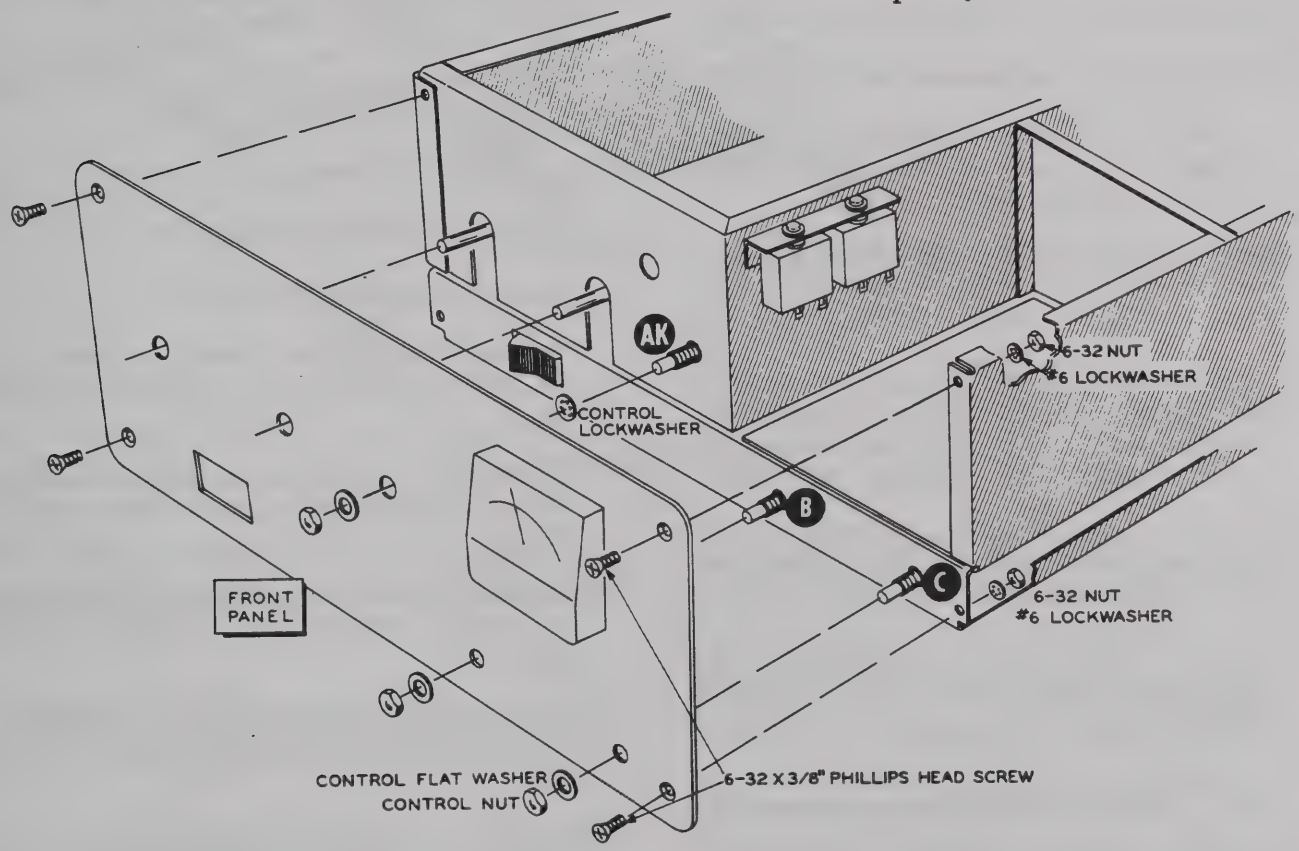

Detail 9F

FINAL WIRING

Refer to Pictorial 10 for the following step.

Connect the wires coming from grommet P as follows:

( ) Shielded cable inner lead to lug C12 of switch AK (S-1). The shield is not used at this end of the cable.

( ) Shorter green power transformer lead to lug 3 of terminal strip M (NS).

( ) Longer green power transformer lead to lug 1 of terminal strip M (NS).

( ) Brown to lug 1 of terminal strip M (NS).

( ) White to lug 3 of terminal strip M (NS).

( ) Green to lug 6 of terminal strip AB (NS).

( ) Violet to lug 5 of terminal strip AB (NS).

( ) Gray to lug 1 of terminal strip AB (NS).

( ) Connect a 33 Ω (orange-orange-black) 1 watt resistor from lug 3 of tube socket V2 (NS) to lug 3 of terminal strip AB (NS).

( ) Connect a 33 Ω (orange-orange-black) 1 watt resistor from lug 3 of tube socket V1 (NS) to lug 3 of terminal strip AB (NS).

( ) Connect a 5 μμf disc capacitor from lug 2 of terminal strip AB (NS) to the lead of the resistor going to lug 3 of tube socket V1 (S-1). Position the capacitor as shown.

( ) Connect a 3300 Ω (orange-orange-red) 1 watt resistor between lugs 6 (NS) and 3 (NS) of terminal strip AB.

( ) Connect the 28 μh RF choke (#45-18) between lugs 3 (S-4) and 6 (NS) of terminal strip AB.

( ) Connect a .02 μfd disc capacitor between lugs 1 (NS) and 2 (NS) of terminal strip M.

( ) Connect a .02 μfd disc capacitor between lugs 2 (S-2) and 3 (NS) of terminal strip M.

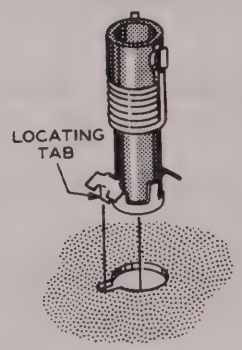

Detail 10A

( ) Connect a 3" bare wire from lug C6 of switch AK (S-1) to lug 2 of tube socket V2 (NS). Use small sleeving. Flatten the end of the wire that connects to the switch lug.

( ) Referring to Detail 10A, install the (#40-728) coil at CA. Press on the coil until the retaining clips snap into place.

( ) In a like manner, install the (#40-727) coil at CB.

( ) Install the (#40-593) coil at CC.

( ) Install the (#40-592) coil at CD.

( ) Install the (#40-591) coil at CE.

( ) Connect a 68 μμf mica capacitor from lug 2 of coil CA (NS) to lug 1 of solder lug AE (S-1).

( ) Connect a 75 μμf mica capacitor from lug 2 of coil CB (NS) to lug 2 of solder lug AE (NS).

( ) Connect a 200 μμf mica capacitor from lug 2 of coil CC (NS) to lug 1 of solder lug AF (NS).

( ) Connect a 310 μμf mica capacitor from lug 2 of coil CD (NS) to lug 2 of solder lug AF (NS).

( ) Connect a 470 μμf silver mica capacitor from lug 2 of coil CE (NS) to lug 2 of solder lug AF (S-2).

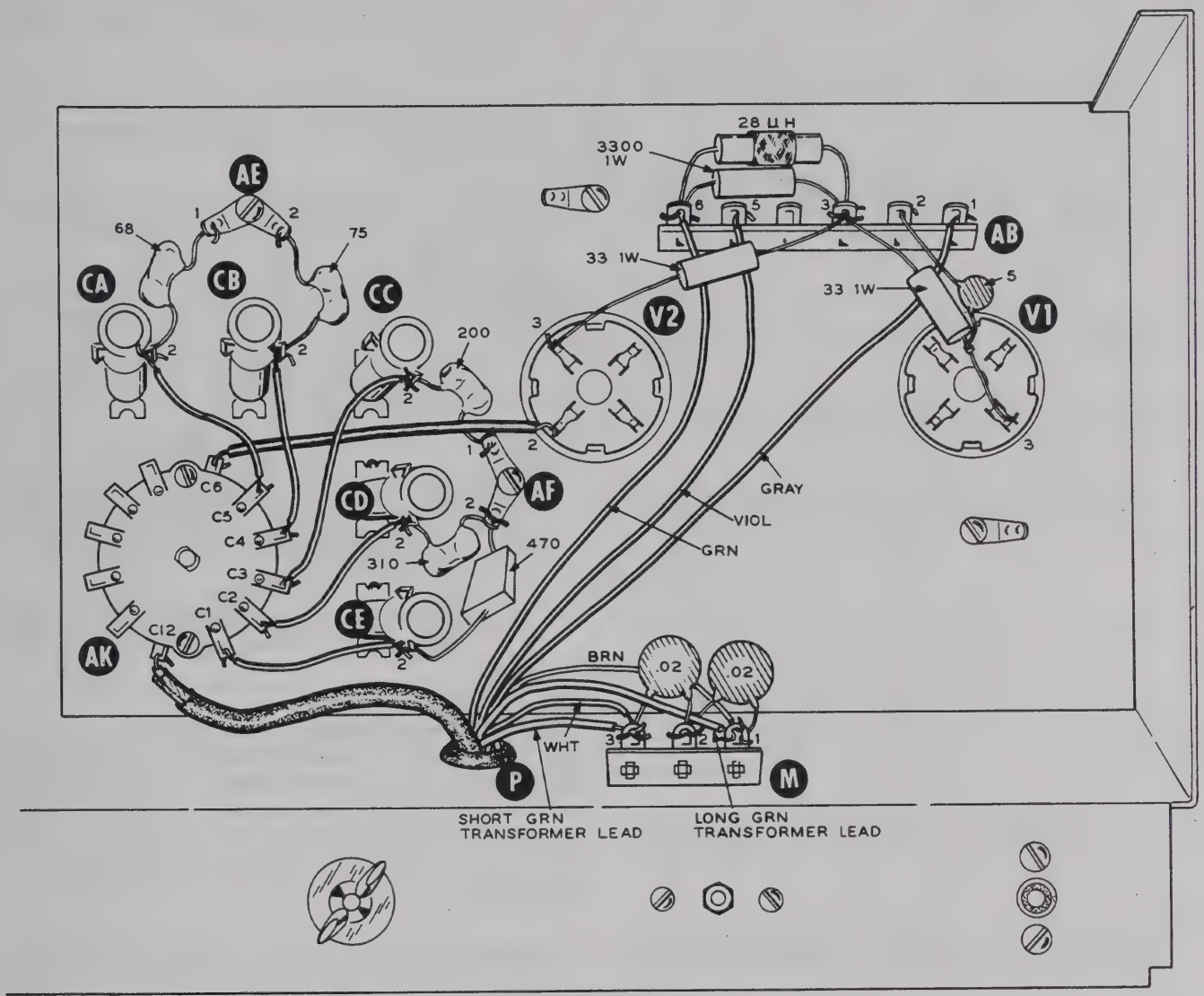

PICTORIAL 10

NOTE: When connecting wires to the remaining lugs of switch AK be sure to solder both lugs at each location.

( ) Connect a 1-1/4" gray wire from lug 2 of coil CA (S-2) to lugs C5 of switch AK (S-1).

( ) Connect a 1-1/4" gray wire from lug 2 of coil CB (S-2) to lugs C4 of switch AK (S-1).

( ) Connect a 2" gray wire from lug 2 of coil CC (S-2) to lugs C3 of switch AK (S-1).

( ) Connect a 1-1/4" gray wire from lug 2 of coil CD (S-2) to lugs C2 of switch AK (S-1).

( ) Connect a 1-1/4" gray wire from lug 2 of coil CE (S-2) to lugs C1 of switch AK (S-1).

Refer to Pictorial 11 for the following steps.

( ) Connect a 360 μμf mica capacitor from lug 1 of coil CC (NS) to lug 2 of solder lug AE (S-2).

( ) Connect a 510 μμf silver mica capacitor from lug 1 of coil CD (NS) to lug 1 of solder lug AF (S-2).

( ) Connect a 2-1/4" gray wire from lug 1 of coil CE (S-1) to lugs C7 of switch AK (S-1).

( ) Connect a 2" gray wire from lug 1 of coil CD (S-2) to lugs C8 of switch AK (S-1).

( ) Connect a 2-3/4" gray wire from lug 1 of coil CC (S-2) to lugs C9 of switch AK (S-1).

( ) Connect a 2" gray wire from lug 1 of coil CB (S-1) to lugs C10 of switch AK (S-1).

( ) Connect a 2-1/4" gray wire from lug 1 of coil CA (S-1) to lugs C11 of switch AK (S-1).

( ) Connect a 200 μμf mica capacitor from lug 3 of tube socket V2 (S-2) to solder lug AD (S-1).

( ) Connect a .02 μfd disc capacitor between lugs 4 (NS) and 5 (NS) of terminal strip AB.

( ) Connect a .02 μfd disc capacitor between lugs 4 (NS) and 6 (S-4) of terminal strip AB.

( ) Connect a .02 μfd disc capacitor between lugs 4 (NS) and 1 (NS) of terminal strip AB. Use sleeving on both leads.

( ) Connect an 18 μμf disc capacitor between lugs 4 (S-4) and 2 (NS) of terminal strip AB.

( ) Connect a 2-1/4" bare wire from lug 4 of tube socket V2 (NS) to lug 1 of tube socket V1 (NS).

( ) Connect a 2-1/4" bare wire from lug 1 of tube socket V2 (NS) to lug 4 of tube socket V1 (NS).

( ) Connect a .02 μfd disc capacitor between lugs 1 (NS) and 4 (S-2) of tube socket V2.

( ) Connect a .02 μfd disc capacitor between lugs 1 (S-3) and 2 (S-2) of tube socket V2.

( ) Connect a 4700 Ω (yellow-violet-red) resistor between lugs 2 (NS) and 5 (S-3) of terminal strip AB.

( ) Connect the cathode (band end) lead of an IN458 silicon diode (yellow-green-gray) to lug 1 (S-3) and the other lead to lug 2 (S-4) of terminal strip AB.

( ) Connect a 200 μμf mica capacitor from lug 3 of tube socket V1 (S-2) to solder lug AC (S-1).

NOTE: In the following steps, bend the leads of the 10 μh RF choke (#45-60) to reach their proper connecting points, then cut off any excess lead lengths. Bend the leads very carefully so as not to damage the coil form. Also, do not allow the choke to extend over the rear edge of the chassis.

( ) At one end of the coil, connect lead 1 to lug 3 (S-4) and lead 2 to lug 1 (S-4) of terminal strip M.

( ) At the other end of the coil, connect lead 4 to lug 4 (S-2) and lead 3 to lug 1 (S-2) of tube socket V1.

This completes the wiring. Carefully check to see that no wiring errors were made and that all connections are soldered. Shake out any wire clippings and solder splashes.

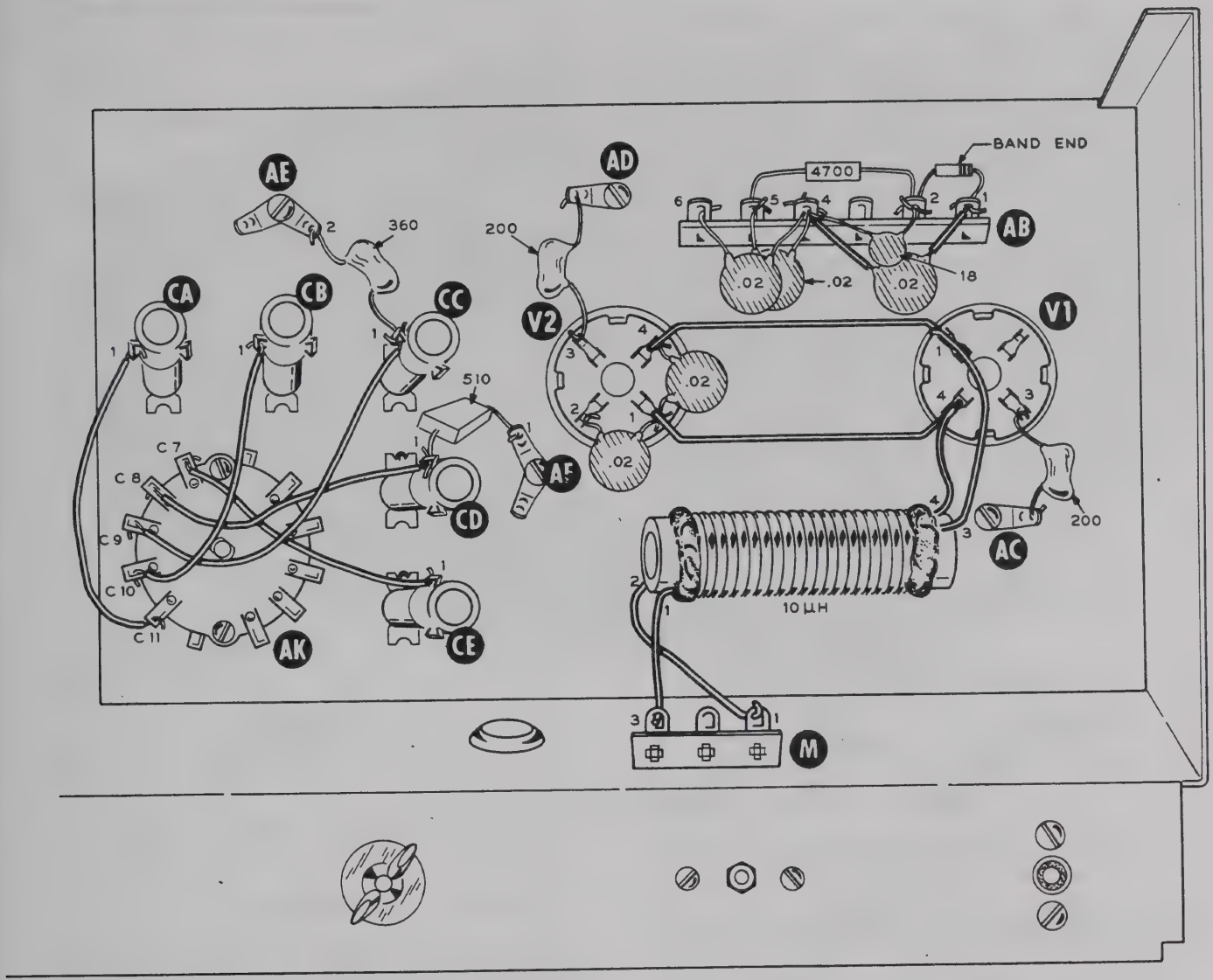

PICTORIAL 11

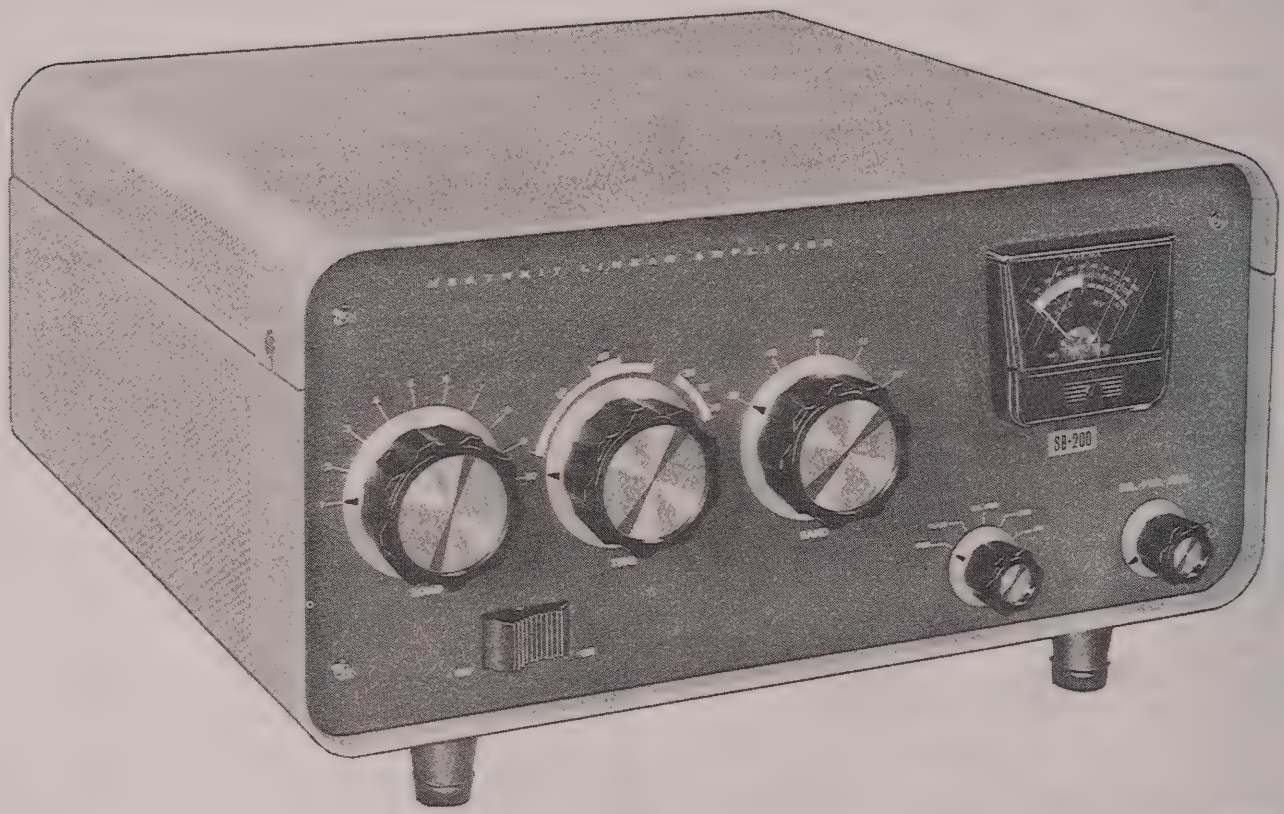

PICTORIAL 12

Refer to Pictorial 12 for the following steps.

( ) Rotate all capacitor, switch, and control shafts fully counterclockwise, except the TUNE capacitor which should be rotated until the plates are fully meshed (closed).

( ) Install small knobs at the Meter and REL PWR SENS locations, using 8-32 x 1/4" setscrews. Position the pointers as shown.

( ) Install the large knobs at the LOAD, TUNE, and BAND locations, using 8-32 x 1/4" setscrews. Position the pointers as shown.

( ) Remove the protective backing from the nameplate and press it firmly in place directly under the meter. The nameplate should cover the printed outline at the nameplate location.

( ) Referring to Pictorial 13, prepare a 4 foot long cable to reach between the Linear Amplifier and your exciter. Use the large shielded cable (RG-58A/U) and a phono plug connected at one end. It will be necessary to install the proper type connector to the other end of this cable to match the antenna connector of your exciter.

NOTE: If it is necessary to install a coaxial connector to any of the cables, refer to Pictorial 14, for proper installation.

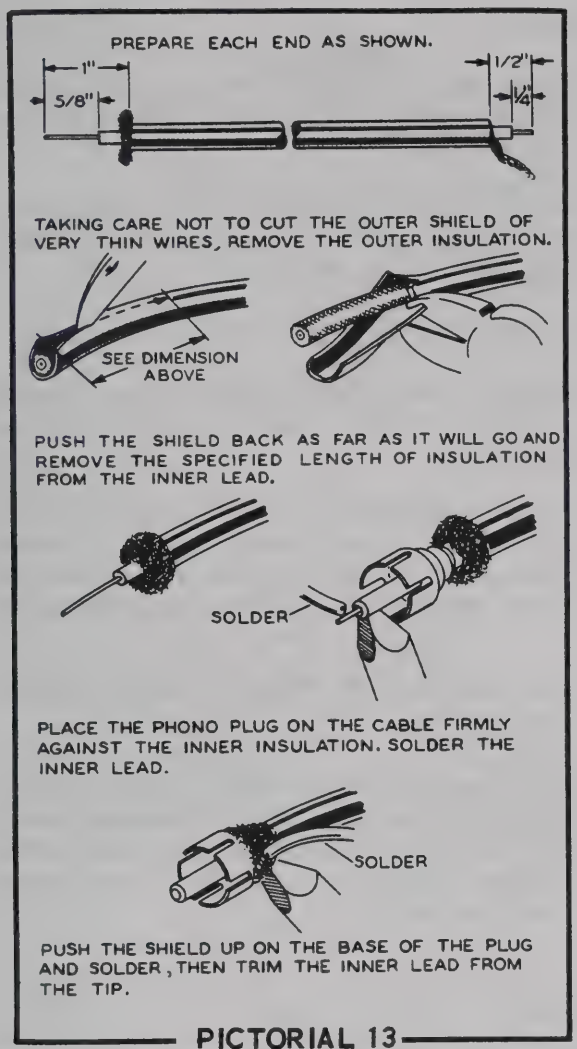
PREPARE EACH END AS SHOWN.
1"
5/8"
1/2"
1/4
TAKING CARE NOT TO CUT THE OUTER SHIELD OF VERY THIN WIRES, REMOVE THE OUTER INSULATION.
SEE DIMENSION ABOVE
PUSH THE SHIELD BACK AS FAR AS IT WILL GO AND REMOVE THE SPECIFIED LENGTH OF INSULATION FROM THE INNER LEAD.
SOLDER
PLACE THE PHONO PLUG ON THE CABLE FIRMLY AGAINST THE INNER INSULATION. SOLDER THE INNER LEAD.
SOLDER
PUSH THE SHIELD UP ON THE BASE OF THE PLUG AND SOLDER, THEN TRIM THE INNER LEAD FROM THE TIP.

PICTORIAL 13

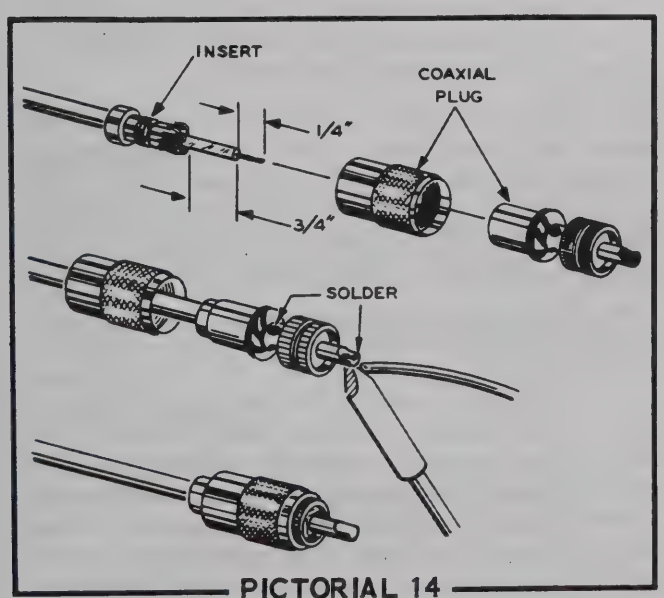

PICTORIAL 14

( ) Referring to Pictorial 15, prepare two 4 foot long cables to reach between the Linear Amplifier and the exciter. Use the small shielded cable with a phono plug connected at one end. It will be necessary to install the proper type of connector to the other ends of these cables to connect to the exciter. One of these cables connects between the ANT RELAY jack of the Linear Amplifier and the LINEAR RELAY jack of the exciter. The other cable connects between the ALC jack of the Linear Amplifier and the ALC input of the exciter, if your exciter has provisions for ALC input from a Linear Amplifier.

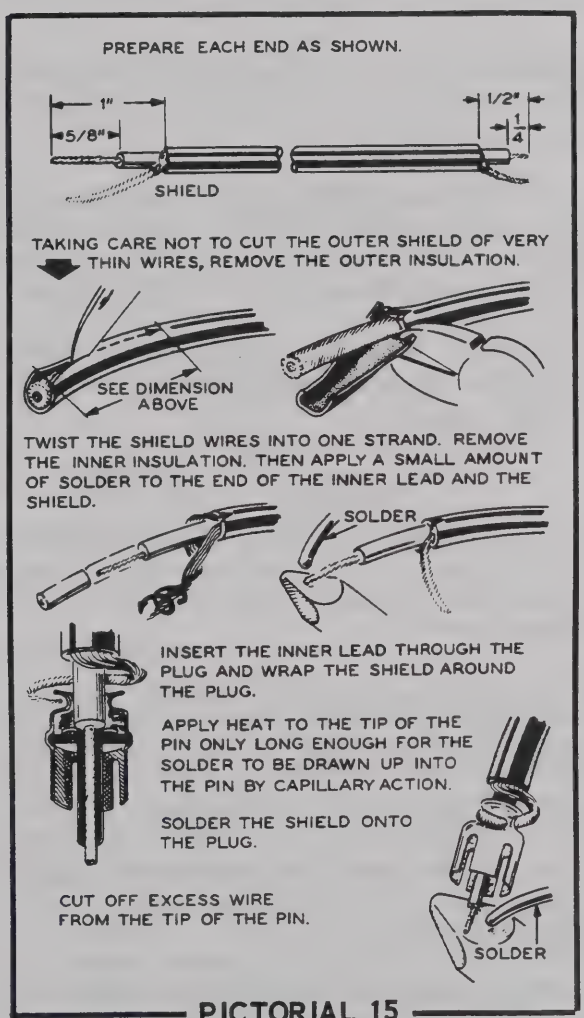
PREPARE EACH END AS SHOWN.
1"
5/8"
1/2"
1/4
SHIELD
TAKING CARE NOT TO CUT THE OUTER SHIELD OF VERY THIN WIRES, REMOVE THE OUTER INSULATION.
SEE DIMENSION ABOVE
TWIST THE SHIELD WIRES INTO ONE STRAND. REMOVE THE INNER INSULATION. THEN APPLY A SMALL AMOUNT OF SOLDER TO THE END OF THE INNER LEAD AND THE SHIELD.
SOLDER
INSERT THE INNER LEAD THROUGH THE PLUG AND WRAP THE SHIELD AROUND THE PLUG.
APPLY HEAT TO THE TIP OF THE PIN ONLY LONG ENOUGH FOR THE SOLDER TO BE DRAWN UP INTO THE PIN BY CAPILLARY ACTION.
SOLDER THE SHIELD ONTO THE PLUG.
CUT OFF EXCESS WIRE FROM THE TIP OF THE PIN.
SOLDER

PICTORIAL 15

INITIAL TEST

The input coils are factory adjusted and do not require any further alignment.

RESISTANCE CHECK

( ) The resistance between either anode clip and the chassis should measure approximately 180 KΩ after the meter stabilizes.

( ) The resistance between lug 3 of either tube socket V1 or V2 and the chassis should measure between 5000 Ω and 15,000 Ω.

If any difficulty is encountered in obtaining either of these resistance readings, refer to the In Case Of Difficulty section of the manual on Page 50.

CAUTION: LETHAL VOLTAGES ARE PRESENT IN THIS UNIT. USE EXTREME CARE WHEN MAKING ANY TESTS.

If at any time during the testing and operation the Linear Amplifier does not perform as described, unplug the Linear Amplifier line cord and refer to the In Case Of Difficulty section of the manual.

( ) Rotate all knobs to their fully counter-clockwise positions, except the TUNE knob which should be at its 9 o'clock position. Place the OFF-ON switch in the OFF position.

( ) Plug the line cord plug into the power source for which the unit is wired, either 120 volts or 240 volts AC.

( ) Push the OFF-ON switch to ON.

( ) Check to see that the tube filaments and meter pilot lamp light, and that the fan operates.

( ) Rotate the meter switch through all of its positions. There should not be a meter indication in any position, except for HV which should read approximately 2400 volts.

( ) Push the OFF-ON switch to OFF and unplug the line cord.

( ) To insure the discharge of the filter capacitors and reduce the shock hazard, short the anode clip of one of the tubes to the chassis, using a screwdriver with an insulated handle.

FINAL ASSEMBLY

Refer to Pictorial 16 for the following steps.

( ) Install the top plate, using #6 x 3/8" sheet metal screws.

( ) Remove the protective backing from a DANGER label and press it firmly in place on the top plate, as shown.

( ) Slide the chassis into the cabinet.

( ) Install rubber feet at the rear of the cabinet, using 6-32 x 3/4" screws and 3/8" flat steel washers.

( ) Install rubber feet and tapered spacers at the front of the cabinet, using 6-32 x 1-1/2" screws and 3/8" flat steel washers. NOTE: If you wish to have the Linear Amplifier set flat, extra 6-32 x 3/4" screws are supplied for mounting feet at the front only.

( ) Install the 8-32 x 1/4" screws in the holes at each side of the cabinet frame. These screws need only be loosened slightly to permit the cover to be opened.

NOTE: The blue and white identification label shows the Model Number and Production Series Number of your kit. Refer to these numbers in any communications with the Heath Company; this assures you that you will receive the most complete and up-to-date information in return.

( ) Install the identification label in the following manner:

1. Select a location for the label where it can easily be seen when needed, but will not show when the unit is in operation. This location might be on the rear panel or the top of the chassis, or on the rear or bottom of the cabinet.
2. Carefully peel away the backing paper. Then press the label into position.

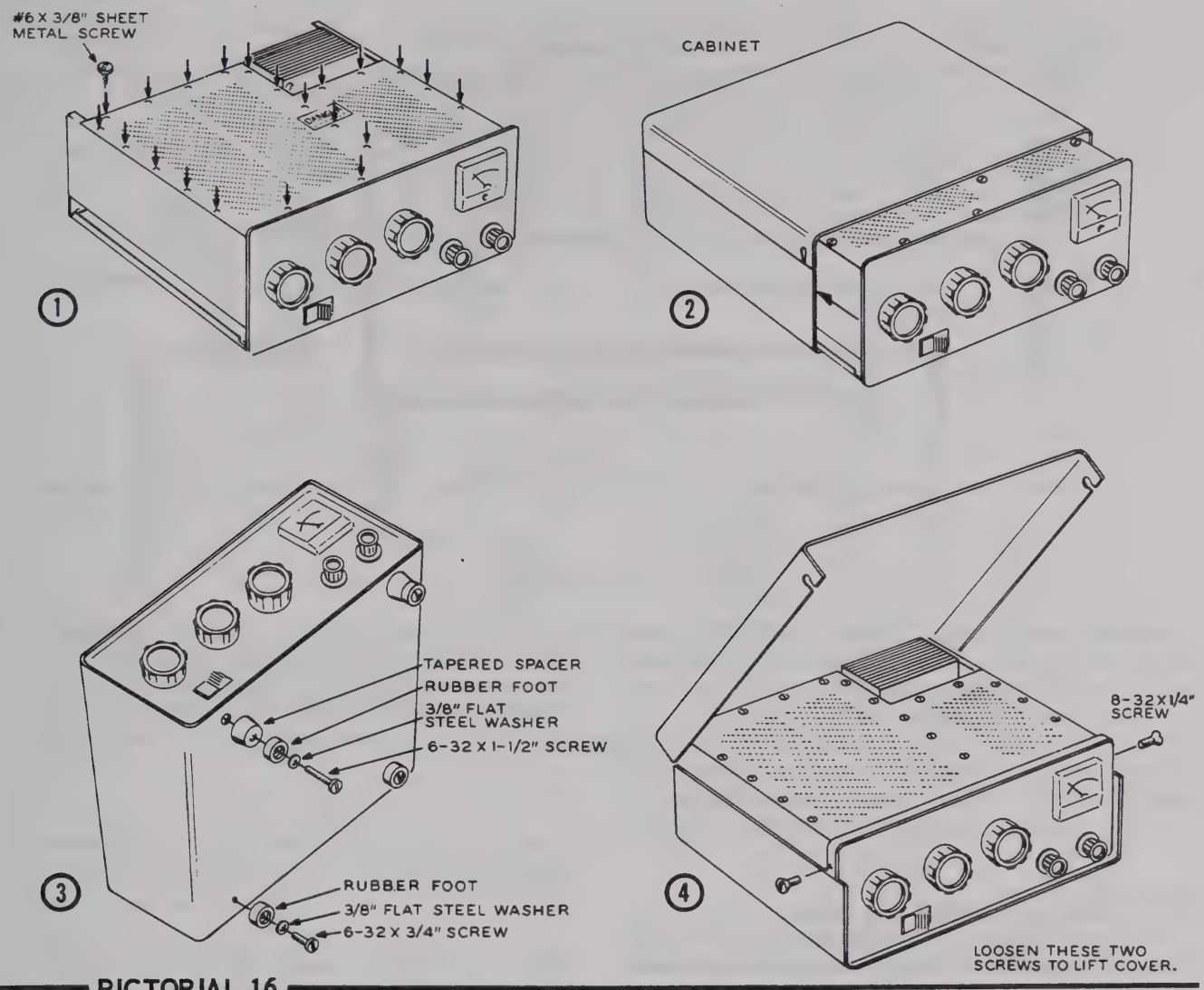

PICTORIAL 16

INSTALLATION

LOCATION

Although the Linear Amplifier has a built-in fan for cooling purposes, avoid excessively warm locations such as those near radiators and heating vents. The unit should be placed in a location that provides adequate space around it, permitting free air circulation through the cabinet openings.

POWER SOURCE

The Linear Amplifier is designed to operate from either a 120 volt or 240 volt AC, 60 cps power source, depending on the jumper installation on terminal strip S. The AC power outlet used should be properly fused and fed with not smaller than #14 wire.

The plug on the power cord for this kit is for standard 120 VAC outlets. For 240 VAC operation in the U.S.A. cut off this plug and replace it with a permanent plug that matches your 240 VAC receptacle. Be sure your power connection conforms with section 210-21 (b) of the National Electric Code, which reads in part:

> "Receptacles connected to circuits having different voltages, frequencies or types of current (AC or DC) on the same premises shall be of such design that attachment plugs used on such circuits are not interchangeable."

When you install a new plug, make sure it is connected according to your local electrical code. Keep in mind that the green line cord wire is connected to the amplifier chassis.

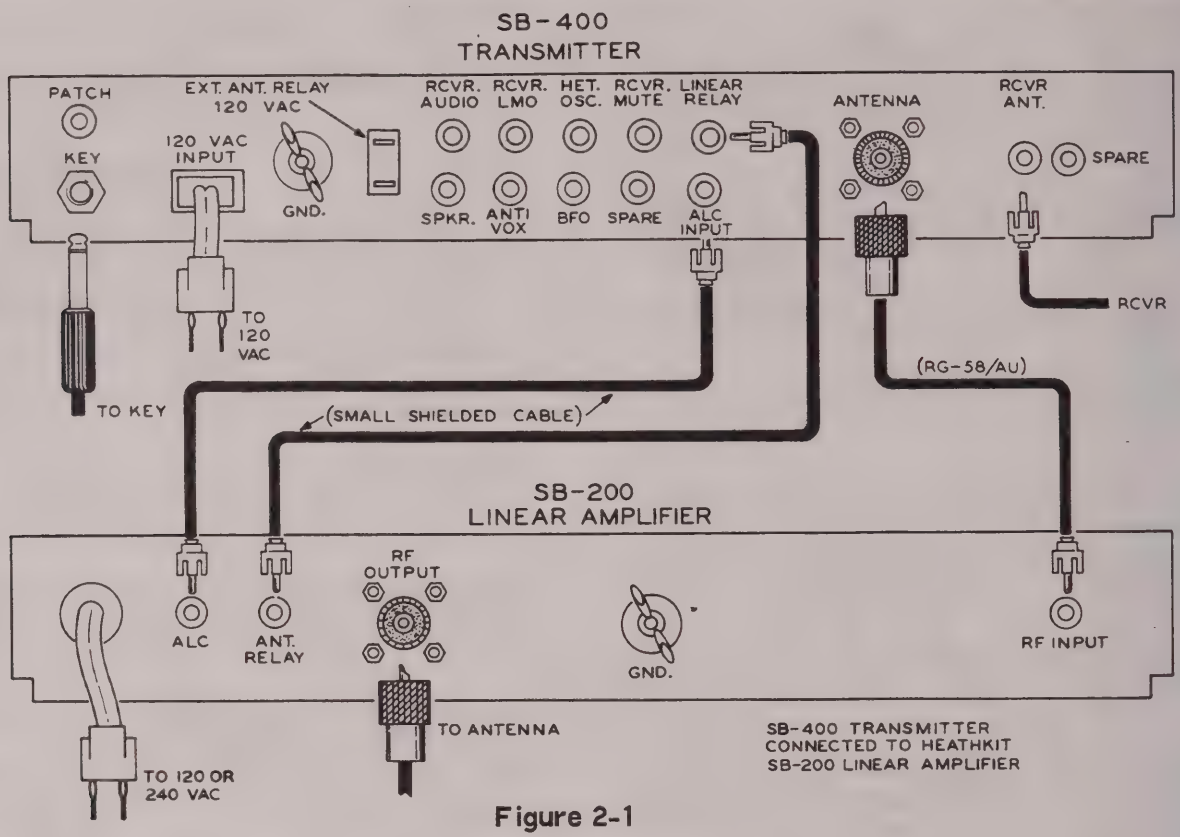

Figure 2-1

EXCITER

The Linear Amplifier can be driven by most commercial or home-built exciters with a power output of approximately 100 watts. The Heathkit SB-400 or SB-401 Transmitter or the SB-100 or SB-101 Transceiver is ideal for use with this Linear Amplifier.

Exciters in the 40 to 60 watt output class will not drive the Linear Amplifier to a full kilowatt, however, the Linear Amplifier will operate quite efficiently at lower power levels.

ANTENNA

The pi-network output is designed to work into a 50 to 75 Ω transmission line. Most commercial and home-built antennas are designed to be fed with 50 or 72 Ω coax. RG-8/U or RG-11/U coaxial cable is recommended for the transmission line, and every effort should be made to get the SWR of the antenna down to less than 2 to 1.

SWR MEASUREMENTS

( ) Connect the amplifier to the exciter and the antenna. Do not turn the Linear Amplifier ON, thus permitting the exciter to feed through the Linear Amplifier to the antenna.

( ) Place the Linear Amplifier Meter switch in the REL PWR position.

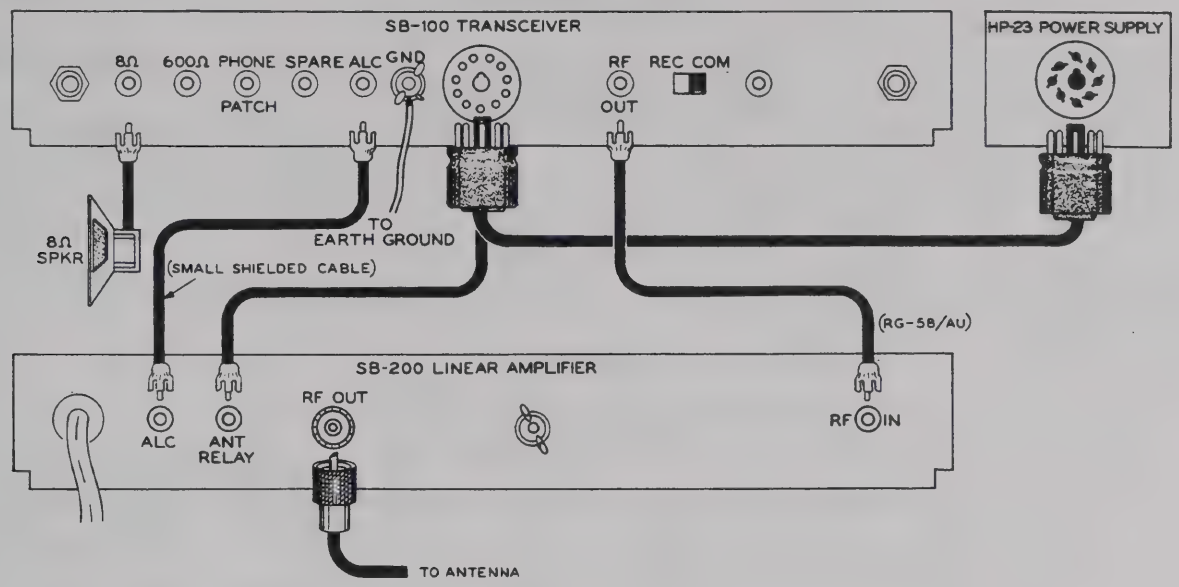

Figure 2-2

( ) Load the exciter to full output. The meter of the Linear Amplifier may be used for this purpose, as it will function in both the REL PWR and SWR positions without the Linear Amplifier being turned ON.

( ) Adjust the REL PWR SENS control of the Linear Amplifier for a SET (full-scale) indication on the meter.

( ) Turn the meter switch to SWR and read the standing wave ratio directly from the meter (1 to 3 scale).

NOTE: SWR checks can also be made with the Linear Amplifier operating at full power (1000 watts); however, due to the nonlinear characteristics of crystal diodes in the SWR circuit, the most accurate SWR readings are obtained at low power (70 to 100 watt) levels using only the exciter. If the exciter alone will not give full scale relative power readings, the Linear Amplifier may be used, however, limit the drive from the exciter to no more than necessary.

Figure 2-1 shows the Linear Amplifier connected to the Heathkit Model SB-400 Transmitter. Other transmitters or exciters would be connected to the Linear Amplifier in a similar manner.

The Heathkit Model SB-100 Transceiver can be connected to the Linear Amplifier as shown in Figure 2-2.

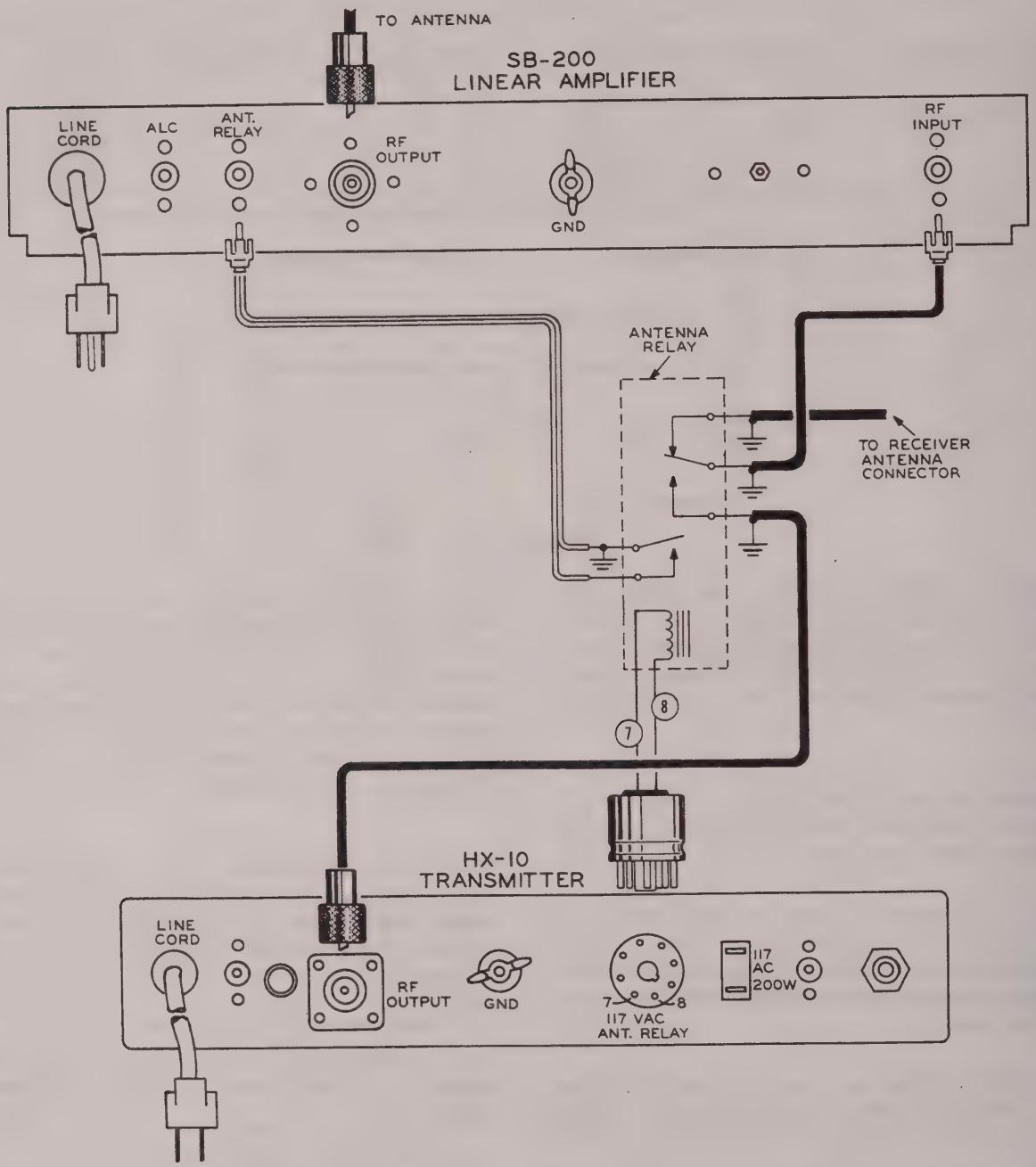

Figure 2-3

Observe in Figure 2-3 that an external antenna relay with extra contacts is necessary to obtain proper antenna switching, when connecting the Linear Amplifier to the Heathkit Model HX-10 Transmitter, and other transmitters not having a built-in antenna relay.

NOTE: The ANT RELAY jack of the Linear Amplifier must be grounded by the exciter to place the Linear Amplifier into operation. (See the Circuit Description.) This grounding is accomplished by the VOX relay or a transmit-receive switch in the exciter.

OPERATION

METER READINGS

Refer to Figure 2-4 and study the meter scale; note how it indicates for the various positions of the Meter switch.

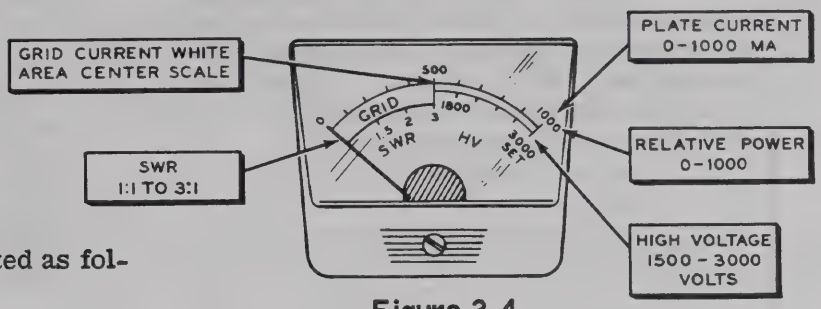

Figure 2-4

The meter scales should be interpreted as follows:

METER SWITCH POSITION	MEASURES	SCALE READING
GRID	Grid current	GRID (white area represents 0-100 ma)
PLATE	Plate current	0-1000 ma
REL PWR	Relative power output	0-1000
SWR	Standing wave ratio	1:1 to 3:1
HV	High voltage	1500-3000

OPERATING PROCEDURE

Make sure the Linear Amplifier is connected to your exciter properly.

( ) Set all switches and controls as follows:

SWITCH OR CONTROL	SWITCH OR CONTROL POSITION	COMMENTS
OFF-ON	OFF	Linear amplifier line cord connected to proper power source.
LOAD	4	Note desired position for antenna used and preset next time.
BAND	80 meters	Or desired band.
TUNE	80 meter segment	Or desired band segment.
METER	REL PWR	
REL PWR SENS	FULLY CLOCKWISE	Adjust to keep meter pointer on scale.

( ) Adjust the exciter for full CW output at the desired frequency. NOTE: With the Linear Amplifier turned OFF, the exciter output is fed through the Linear Amplifier to the RF OUTPUT jack. Also, the REL PWR and SWR functions of the Meter may be used to aid in tuning the exciter.

( ) Reduce the drive level of the exciter to a minimum.

( ) Place the Meter switch of the Linear Amplifier in the PLATE position and push the OFF-ON switch to ON. With no driver output from the exciter, the Linear Amplifier meter should show idling plate current of approximately 90 ma.

( ) Advance the drive level of the exciter for a 200 ma plate current indication on the meter of the Linear Amplifier.

( ) Quickly switch the Linear Amplifier Meter switch to REL PWR. If necessary, reduce the REL PWR SENS control setting to keep the meter pointer within the scale.

( ) Adjust the TUNE and LOAD controls for a maximum REL PWR meter indication.

( ) Increase the drive level from the exciter to full output.

( ) Again, adjust the TUNE and LOAD controls for a maximum REL PWR meter indication.

( ) Check the GRID and PLATE meter readings. If the grid reading is greater than midscale, reduce the drive level of the exciter to bring grid current within the GRID range of the meter. If the plate current reading is higher than 500 ma, reduce loading by turning the LOAD control counterclockwise.

This procedure of tuning the Linear Amplifier should take only a few seconds, after you go through it a few times. Note the LOAD control position so it can be preset next time a particular band is used.

The Linear Amplifier is now loaded for operation at maximum input power. If an oscilloscope is being used for monitoring, a display similar to that shown in Figure 2-5 should be obtained.

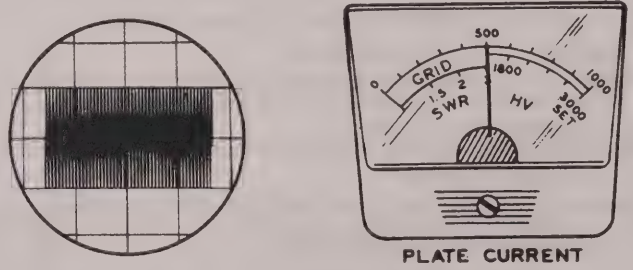

Oscilloscope pattern and plate meter reading resulting from carrier or "single tone" modulation. The meter indicates maximum or CW power input.

Figure 2-5

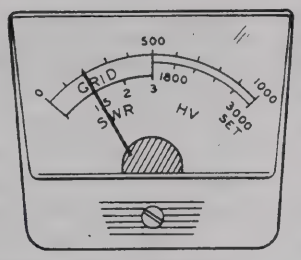

PLATE CURRENT

Oscilloscope pattern and plate meter reading resulting from voice modulation. Notice the peaks on the oscilloscope pattern. They are sharp, indicating a clean signal, and they will attain a height slightly greater than the "single tone" pattern of Figure 2-5, indicating maximum power input. NOTE: Plate current peak reading is approximately 1/2 or less of maximum "single tone" reading due to meter inertia and voice characteristics.

Figure 2-6

Turn the exciter to standby to remove drive from the Linear Amplifier.

The Linear Amplifier is now ready for SSB or CW transmission. An example of a proper oscilloscope pattern is shown in Figure 2-6. Note that there are sharp distinct peaks. The number of patterns or "christmas trees" will depend on the individual voice and the scope sweep speed. Set the scope for about a 30 cps sweep.

Note that the meter reading on voice peaks will not be high; however, the height of the oscilloscope pattern is slightly greater than that shown in Figure 2-5. This increase in peak power is due to dynamic characteristics of the power supply and allows the Linear Amplifier to develop approximately 20% greater peak envelope power for a given level of CW input. The meter will indicate only one-half or less of the single tone level, depending on the individual's voice, before "flat topping" occurs.

Figure 2-7 shows the same voice pattern but with extreme "flat topping." The oscilloscope shows that no more useful power is being developed. The meter reads higher, but only distortion is developed.

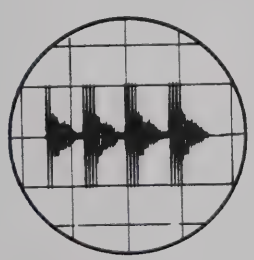

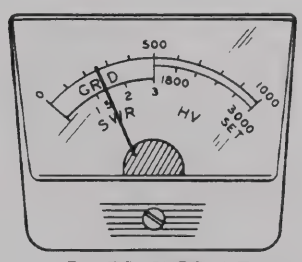

PLATE CURRENT

Oscilloscope pattern and plate meter reading resulting from over modulation. The meter reads higher, but the scope indicates peak flattening. Operation in this manner causes distortion and severe interference to adjacent frequencies.

Figure 2-7

IN CASE OF DIFFICULTY

1. Recheck the wiring. Trace each lead in colored pencil on the Pictorial as it is checked. It is frequently helpful to have a friend check your work. Someone who is not familiar with the unit may notice something consistently overlooked by the constructor.

2. It is interesting to note that about 90% of the kits that are returned for repair, do not function properly due to poor connections and soldering. Therefore, many troubles can be eliminated by reheating all connections to make sure that they are soldered as described in the Proper Soldering Techniques section of this manual.

3. Make sure that the tubes light up properly.

4. Check the tubes with a tube tester or by substitution of tubes of the same types and known to be good.

5. Check the values of the parts. Be sure that the proper part has been wired into the circuit, as shown in the Pictorial Diagrams and as called out in the wiring instructions.

6. Check for bits of solder, wire ends or other foreign matter which may be lodged in the wiring.

7. If, after careful checks, the trouble is still not located and a voltmeter is available, check voltage readings against those shown on the Schematic Diagram. NOTE: All voltage readings were taken with an 11 megohm input vacuum tube voltmeter. Voltages may vary as much as 10%.

8. A review of the Circuit Description will prove helpful in indicating where to look for trouble.

NOTE: In an extreme case where you are unable to resolve a difficulty, refer to the Service and Warranty sections of the "Kit Builders Guide", and to the "Factory Repair Service" information on Page 51 of this Manual.

FACTORY REPAIR SERVICE

You can return your completed kit to the Heath Company Service Department to have it repaired for a minimum service fee. (Kits that have been modified will not be accepted for repair.) Or, if you wish, you can deliver your kit to a nearby Heathkit Electronic Center. These centers are listed in your Heathkit catalog. NOTE: Do not include wooden cabinets, which are easily damaged in shipment, when returning equipment for service.

To be eligible for replacement parts under the terms of the warranty, equipment returned for factory repair service, or delivered to a Heathkit Electronic Center, must be accompanied by the invoice or the sales slip, or a copy of either. If you send the original invoice or sales slip, it will be returned to you.

If it is not convenient to deliver your kit to a Heathkit Electronic Center, please ship it to the factory at Benton Harbor, Michigan and observe the following shipping instructions:

Prepare a letter in duplicate, containing the following information:

- Your name and return address.
- Date of purchase.
- A brief description of the difficulty.
- The invoice or sales slip, or a copy of either.
- Your authorization to ship the repaired unit back to you C.O.D. for the service and shipping charges, plus the cost of parts not covered by the warranty.

Attach the envelope containing one copy of this letter directly to the unit before packaging, so that we do not overlook this important information. Send the second copy of the letter by separate mail to Heath Company, Attention: Service Department, Benton Harbor, Michigan 49022.

Check the equipment to see that all parts and screws are in place. Then, wrap the equipment in heavy paper. Place the equipment in a strong carton, and put at least THREE INCHES of resilient packing material (shredded paper, excelsior, etc.) on all sides, between the equipment and the carton. Seal the carton with gummed paper tape, and tie it with a strong cord. Ship it by prepaid express, United Parcel Service, or insured parcel post to:

Heath Company
Service Department
Benton Harbor, Michigan 49022

REPLACEMENT PARTS PRICE LIST

To order parts, use the Parts Order Form furnished with this kit. If Parts Order Form is not available, refer to "Replacement Parts" in the "Kit Builders Guide".

PART No.	PRICE Each	DESCRIPTION
RESISTORS		
1/2 Watt		
1-140	.15	1.5 Ω
1-3	.10	100 Ω
1-16	.10	4700 Ω
1-21	.10	15 KΩ
2-121	.10	3600 Ω precision
1 Watt		
1-14-1	.10	33 Ω
1-3-1	.10	3300 Ω
1-38-1	.10	4.7 megohm
Other Resistors		
1-3-2	.20	10 KΩ 2 watt
3-25-5	.90	1 Ω 5 watt
3-12-7	.15	700 Ω 7 watt
3-14-7	.15	2000 Ω 7 watt
5-2-7	.30	30 KΩ 7 watt
3-2-17	.35	465 Ω 15 watt
CAPACITORS		
20-40	.20	470 μμf silver mica
20-123	.50	500 μμf 2 KV silver mica (.0005)
20-42	.20	510 μμf silver mica
20-76	.15	68 μμf mica
20-110	.15	75 μμf mica
20-108	.20	200 μμf mica
20-112	.25	310 μμf mica
20-131	.25	360 μμf mica
21-78	.10	5 μμf disc
21-60	.10	18 μμf disc
21-72	.20	.005 μfd 1.4 KV disc
21-90	.20	.001 μfd 3 KV disc
21-31	.10	.02 μfd disc
21-109	2.70	100 μμf 5 KV tubular ceramic
21-165	1.75	1000μμf 6 KV tubular ceramic
25-39	.60	2 μfd 150 V electrolytic
25-19	.55	20 μfd 150 V electrolytic
25-34	2.10	125 μfd 450 V electrolytic
26-96	12.40	150 μμf, 3 KV, variable
26-97	24.90	874.8 μμf variable, 2-section

PART No.	PRICE Each	DESCRIPTION
CONTROLS-SWITCHES		
10-12	.45	100 KΩ control
61-14	2.40	DPST rocker switch
63-351	4.35	3-wafer rotary switch
63-352	3.05	1-wafer rotary switch
65-15	1.80	8 ampere circuit breaker
69-5	5.00	DPDT 110 V AC relay
COILS-CHOKES-TRANSFORMERS		
40-98	.55	RF driver element
40-99	.10	RF pickup element
40-591	.55	80 meter input coil
40-592	.55	40 meter input coil
40-593	.55	20 meter input coil
40-727	.50	15 meter input coil
40-728	.50	10 meter input coil
40-596	1.40	10 and 15 meter final coil
40-597	4.00	20, 40, and 80 meter final coil
45-4	.40	1.1 mh RF choke
45-60	3.05	10 μh RF choke
45-18	.30	28 μh RF choke
45-61	.60	50 μh RF choke
45-53	.40	Parasitic RF choke
54-151	33.75	Power transformer
DIODES-TUBES		
56-26	.30	1N191 crystal diode
56-24	.60	1N458 silicon diode
57-27	.60	Silicon diode
411-198	17.95	572-B tube or T160-L
INSULATORS-GROMMETS-TERMINAL STRIPS-SOCKETS		
71-5	.45	Ceramic standoff insulator with 6-32 stud
73-4	.10	5/16" grommet
73-1	.10	3/8" grommet
73-3	.10	1/2" grommet
75-29	.60	Line cord strain relief
431-50	.10	1-lug terminal strip
431-16	.10	2-lug terminal strip
431-10	.10	3-lug terminal strip
431-11	.10	5-lug terminal strip
431-45	.10	6-lug terminal strip
431-13	.15	Screw type terminal strip
434-9	.30	4-lug tube socket
434-42	.10	Phono socket
436-5	.85	Coaxial socket
438-9	.75	Coaxial plug
438-12	.20	Coaxial plug insert
438-4	.10	Phono plug

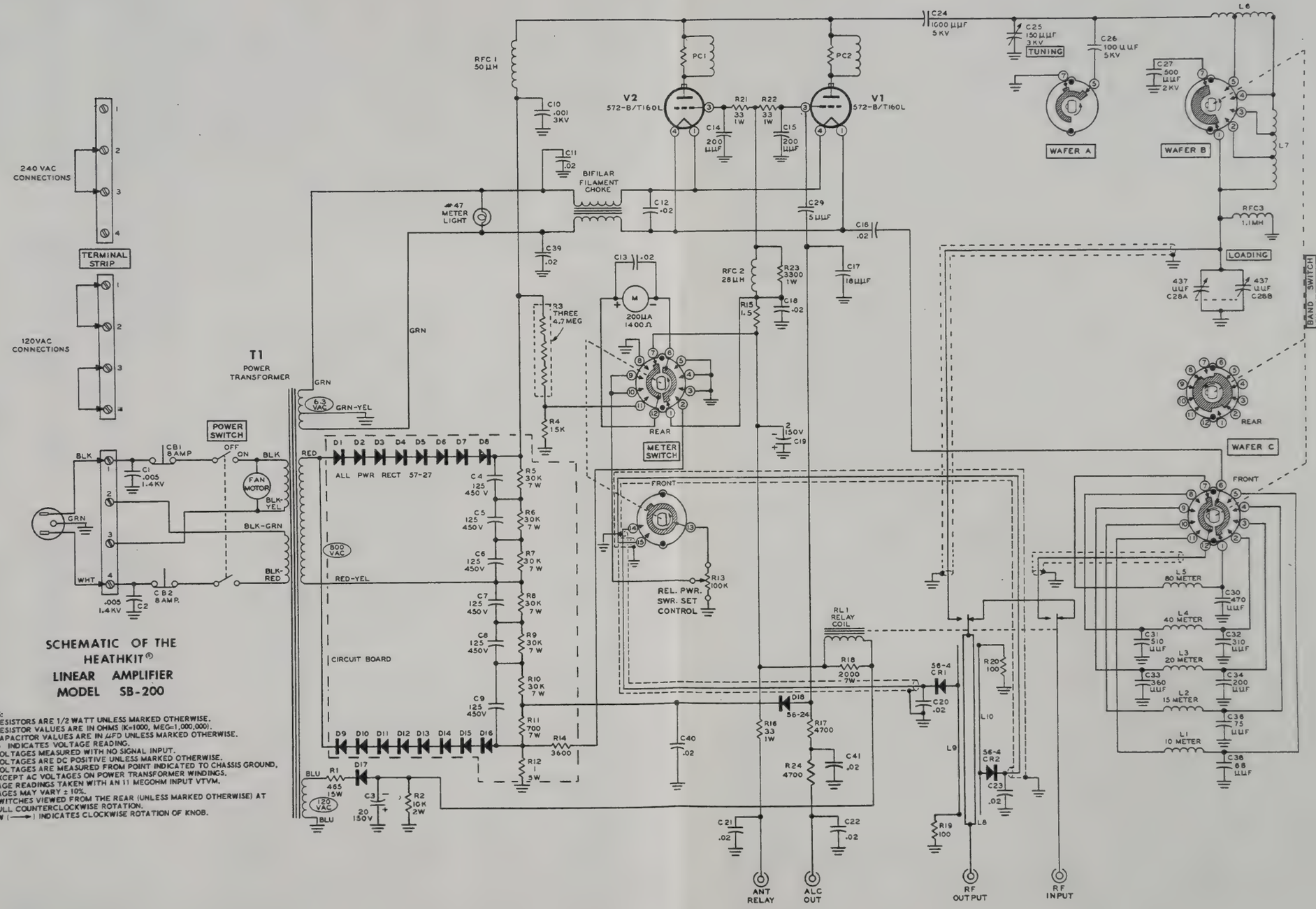

SCHEMATIC OF THE HEATHKIT® LINEAR AMPLIFIER MODEL SB-200

NOTES:
ALL RESISTORS ARE 1/2 WATT UNLESS MARKED OTHERWISE.
ALL RESISTOR VALUES ARE IN OHMS (K=1000, MEG=1,000,000).
ALL CAPACITOR VALUES ARE IN µFD UNLESS MARKED OTHERWISE.
(⬭) INDICATES VOLTAGE READING.
ALL VOLTAGES MEASURED WITH NO SIGNAL INPUT.
ALL VOLTAGES ARE DC POSITIVE UNLESS MARKED OTHERWISE.
ALL VOLTAGES ARE MEASURED FROM POINT INDICATED TO CHASSIS GROUND, EXCEPT AC VOLTAGES ON POWER TRANSFORMER WINDINGS.
VOLTAGE READINGS TAKEN WITH AN 11 MEGOHM INPUT VTVM.
VOLTAGES MAY VARY ± 10%.
ALL SWITCHES VIEWED FROM THE REAR (UNLESS MARKED OTHERWISE) AT FULL COUNTERCLOCKWISE ROTATION.
ARROW (⟶) INDICATES CLOCKWISE ROTATION OF KNOB.

PART No.	PRICE Each	DESCRIPTION
WIRE-CABLE-SLEEVING		
89-22	1.40	Line cord
134-107	2.25	Cable assembly
340-1	.05/ft	Bare wire
344-52	.05/ft	Red solid hookup wire
344-54	.05/ft	Yellow solid hookup wire
344-55	.05/ft	Green solid hookup wire
344-58	.05/ft	Gray solid hookup wire
344-13	.05/ft	Large blue hookup wire
343-2	.10/ft	Large shielded cable
343-3	.05/ft	Small shielded cable
346-4	.05/ft	Small sleeving
346-3	.10/ft	Large sleeving
HARDWARE		
Screws		
250-213	.05	4-40 x 5/16"
250-28	.05	6-32 x 1/4" setscrew
250-8	.05	#6 x 3/8" sheet metal screw
250-138	.05	6-32 x 3/16" screw
250-56	.05	6-32 x 1/4"
250-89	.05	6-32 x 3/8"
250-218	.05	6-32 x 3/8" phillips head
250-32	.05	6-32 x 3/8" flat head
250-26	.05	6-32 x 5/8"
250-29	.05	6-32 x 3/4"
250-40	.05	6-32 x 1-1/2"
250-260	.05	8-32 x 1/4"
250-43	.05	8-32 x 1/4" setscrew
250-141	.05	10-24 x 1/2"
250-126	.05	10-32 x 1/2"
250-67	.05	10-24 x 1-1/8" phillips head
251-1	.05	6-32 spade bolt
Nuts		
252-15	.05	4-40
252-3	.05	6-32
252-30	.05	10-24
252-31	.10	10-24 wingnut
252-7	.05	Control
WASHERS		
253-27	.05	5/16" flat steel
253-8	.05	7/16" flat brass
253-60	.05	3/8" flat steel
253-1	.05	3/8" fiber flat
253-3	.05	1/2" fiber flat
253-7	.05	1/2" fiber shoulder
253-10	.05	Flat control
253-19	.05	3/4" flat steel
254-9	.05	#4 lockwasher
254-1	.05	#6 lockwasher
254-3	.05	#10 lockwasher
254-4	.05	Control lockwasher

PART No.	PRICE Each	DESCRIPTION
MISCELLANEOUS		
255-2	.05	3/16" spacer
255-42	.30	3/4" phenolic spacer
255-12	.10	Plastic spacer
255-59	.15	Tapered spacer
259-1	.05	#6 solder lug
259-5	.05	#10 solder lug
259-10	.05	Control solder lug
260-34	.25	Anode clip
435-1	.05	Socket ring
METAL PARTS		
40-100	.20	Coaxial cavity
90-341	20.80	Cabinet
200-403-1	6.60	Chassis
203-384-1	1.55	Front panel
205-492	.10	Capacitor mounting bracket
204-560	.25	Angle bracket
204-611	.15	Circuit breaker mounting bracket
206-254	1.90	RF shield
206-255	.50	Power supply shield
205-438	1.75	Top plate
MISCELLANEOUS		
85-88-2	3.20	Circuit board
261-9	.05	Rubber foot
266-21	.60	Fan blade
390-147	.10	DANGER label
391-31	.15	Nameplate
407-103	11.40	Meter
420-3	5.00	Motor
432-27	.40	3-prong AC adapter
462-191	.70	Small knob
462-210	1.05	Large knob
331-6	.15	Solder
	2.00	Manual (See front cover for part number.)

The above prices apply only on purchases from the Heath Company where shipment is to a U.S.A. destination. Add 10% (minimum 25 cents) to the price when ordering from a Heathkit Electronic Center to cover local sales tax, postage and handling. Outside the U.S.A. parts and service are available from your local Heathkit source and will reflect additional transportation, taxes, duties and rates of exchange.

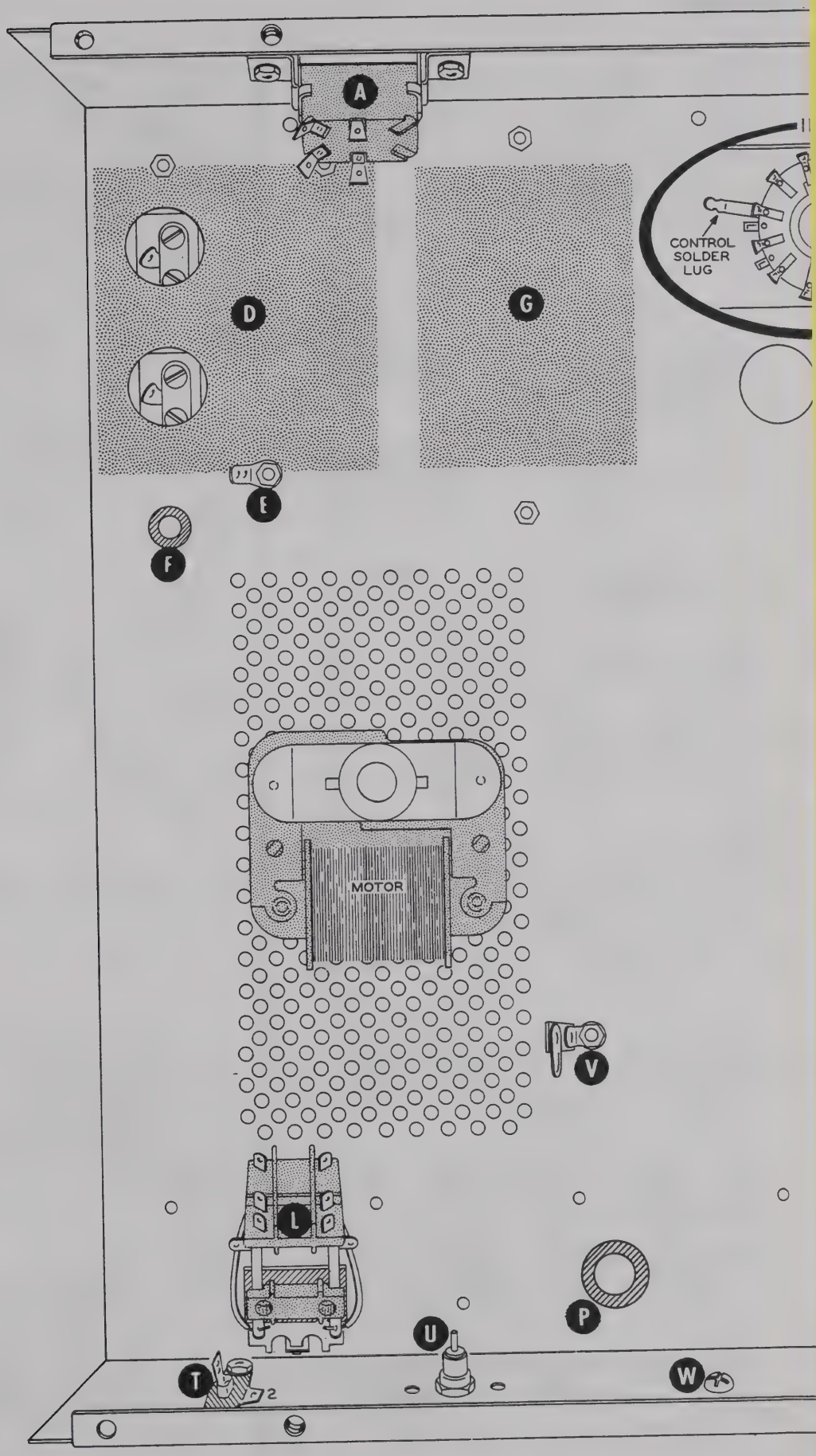

PICTORIA

PARTS PICTORIAL

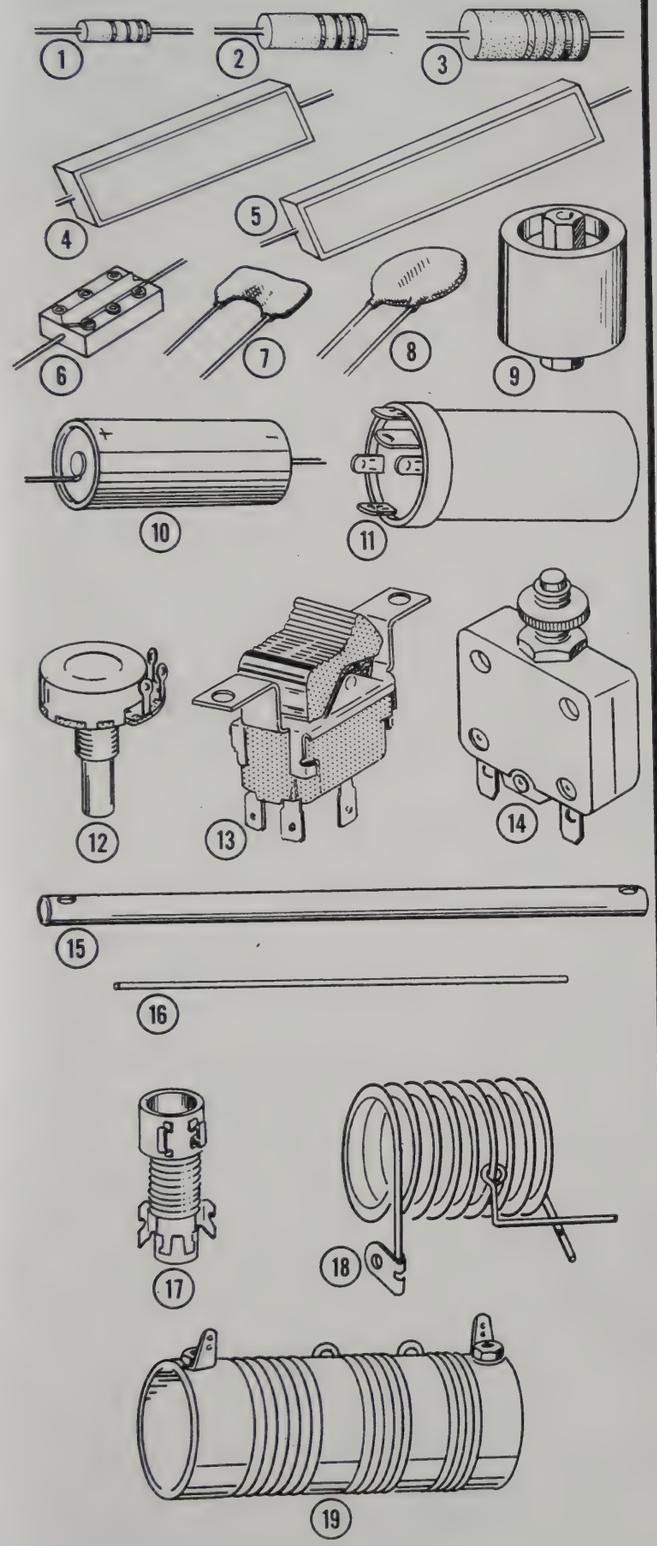

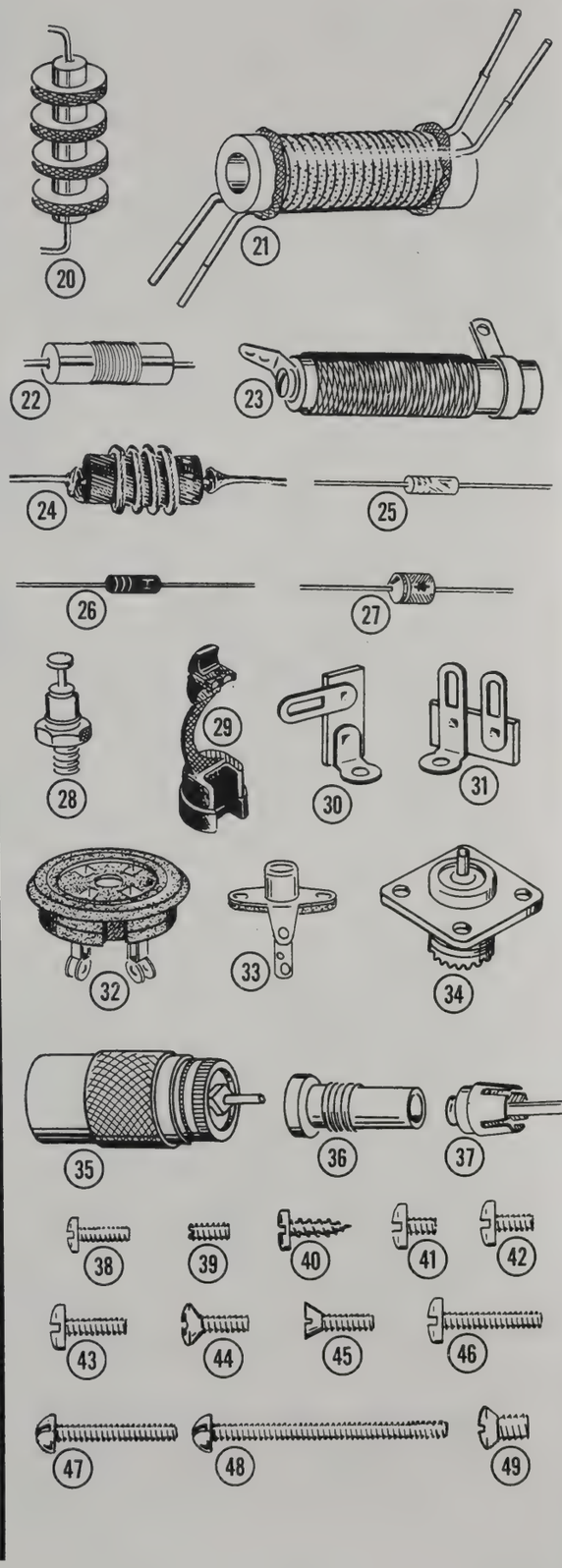

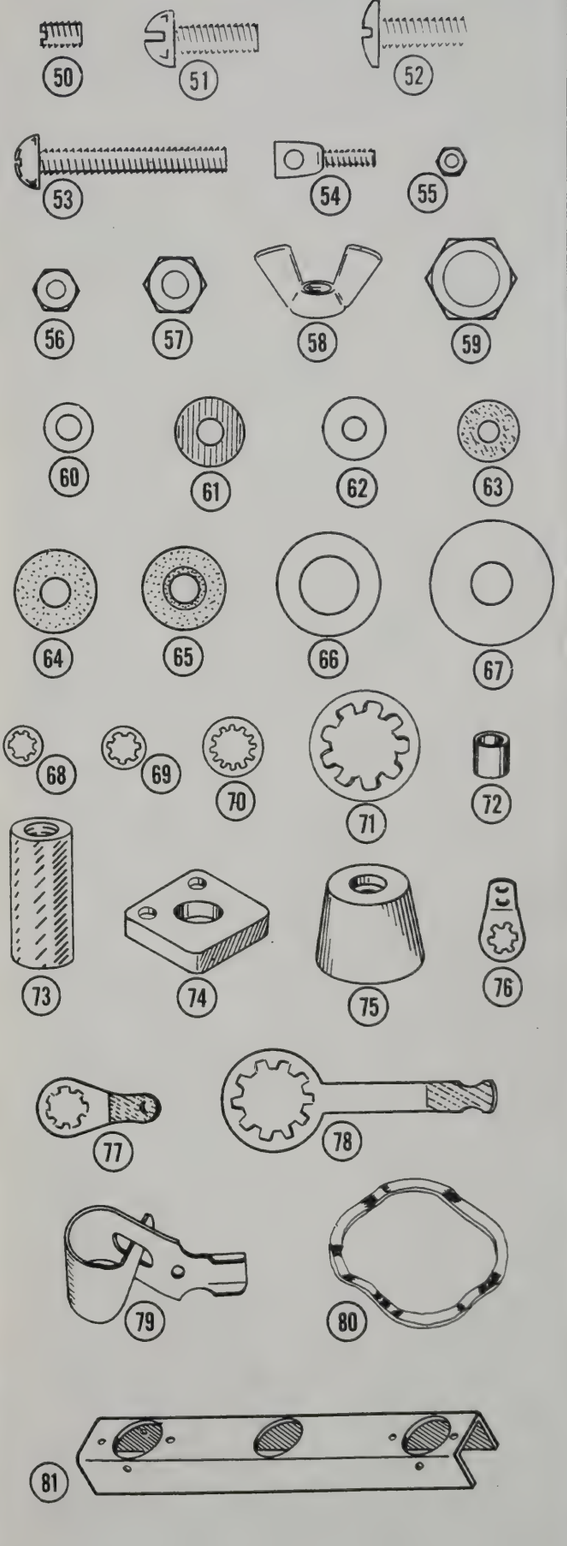

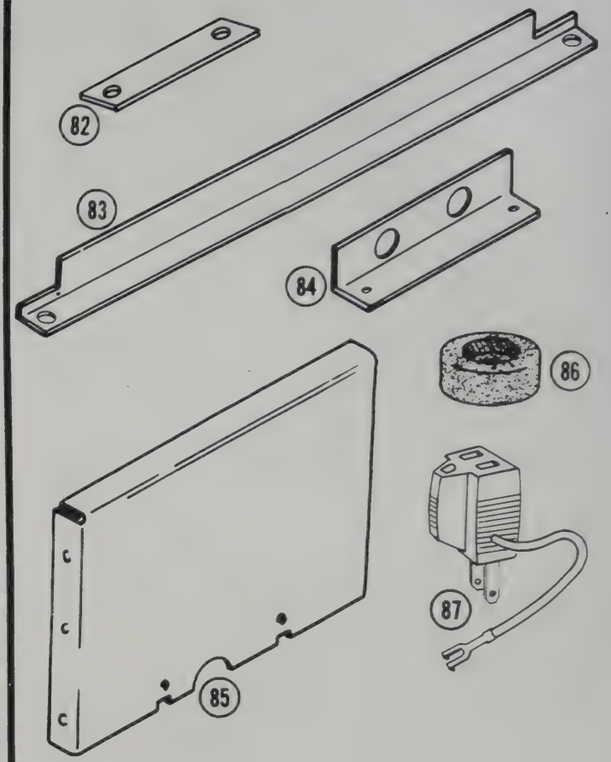

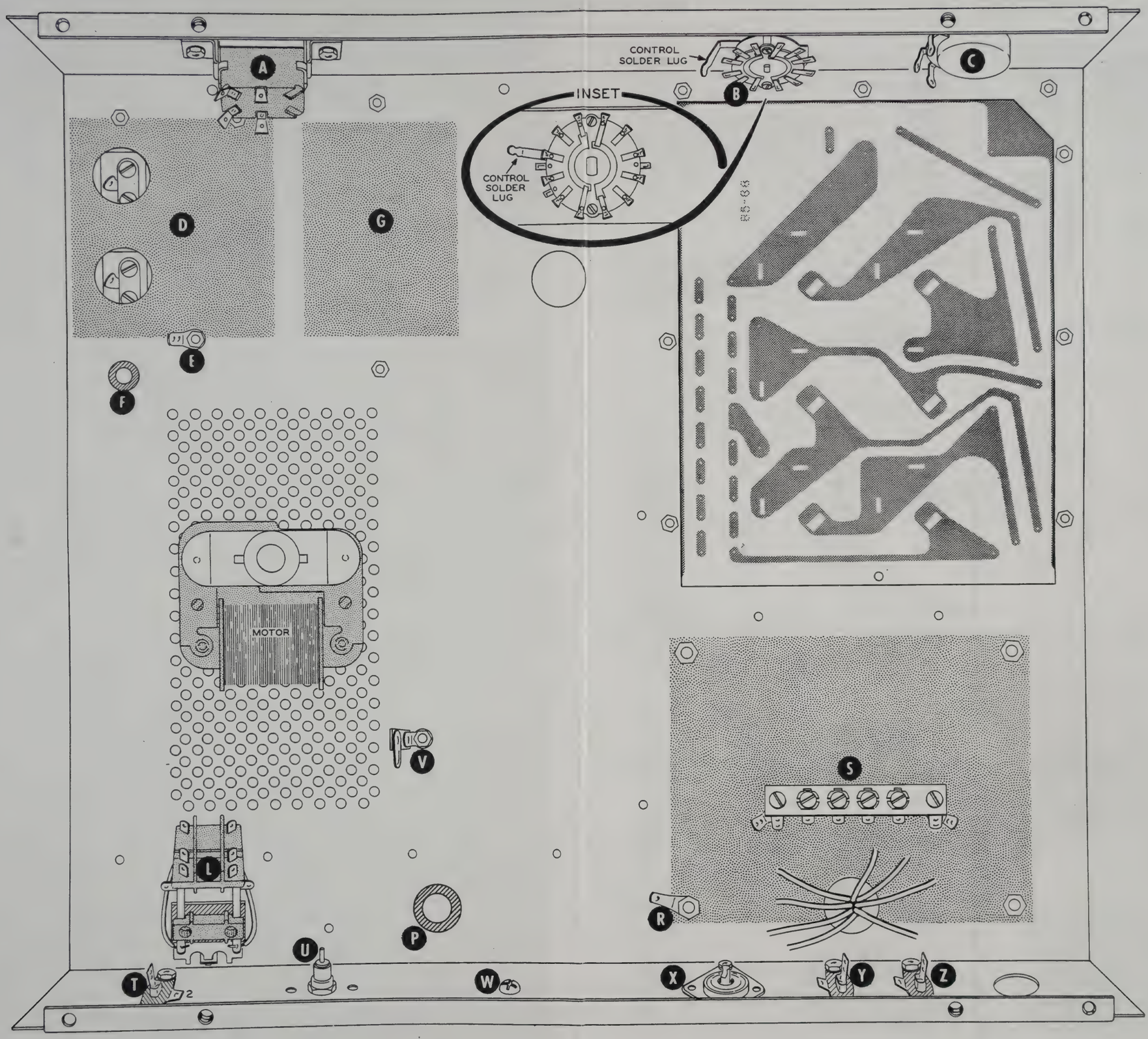
A
B
CONTROL SOLDER LUG
C
INSET
CONTROL SOLDER LUG
D
G
E
F
MOTOR
V
L
P
U
T
W
X
Y
Z
S
R
85-65

PICTORIAL 2

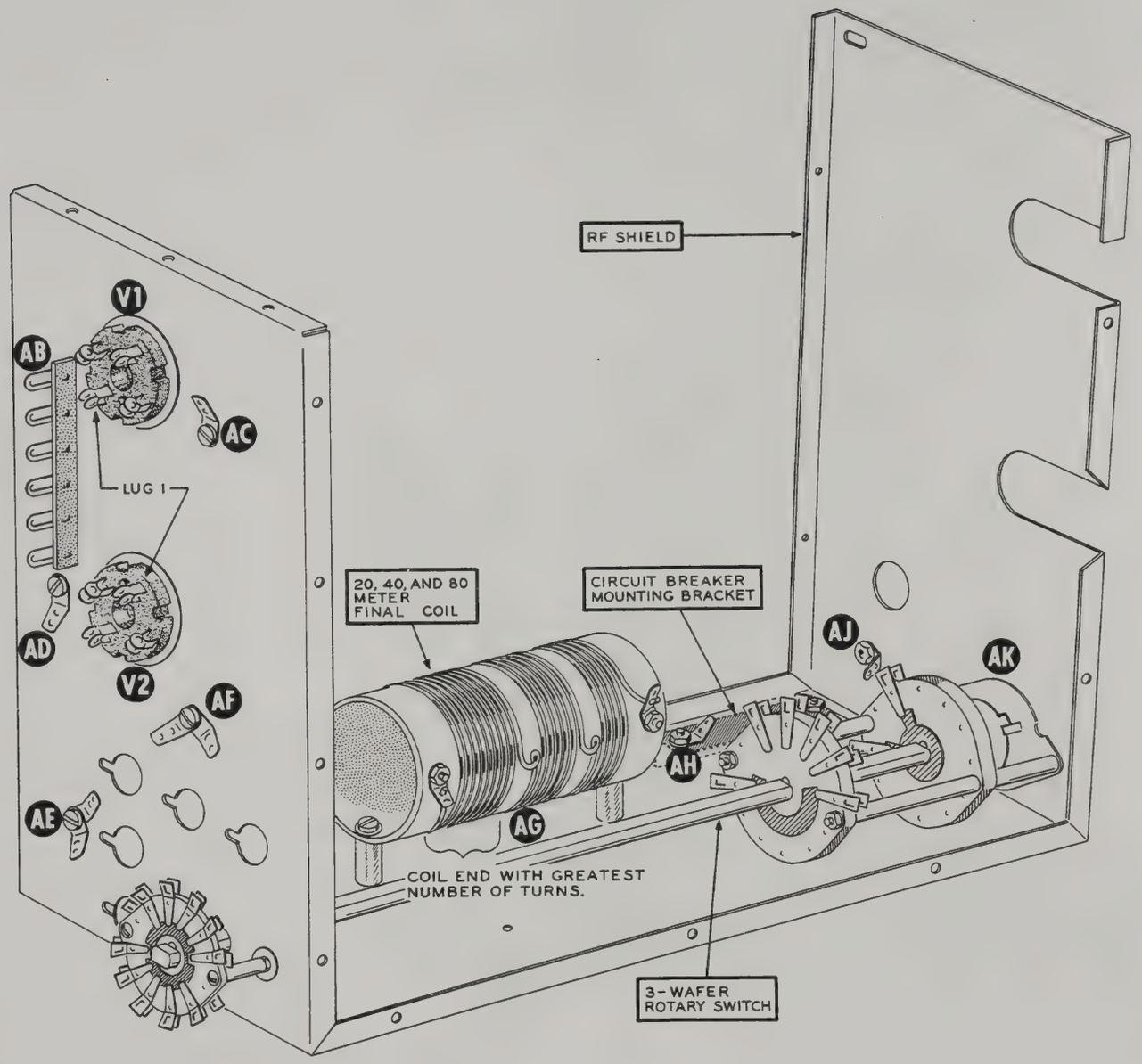
RF SHIELD
V1
AB
AC
LUG 1
AD
V2
AF
AE
20, 40, AND 80
METER
FINAL COIL
CIRCUIT BREAKER
MOUNTING BRACKET
AJ
AK
AH
AG
COIL END WITH GREATEST
NUMBER OF TURNS.
3-WAFER
ROTARY SWITCH

PICTORIAL 3

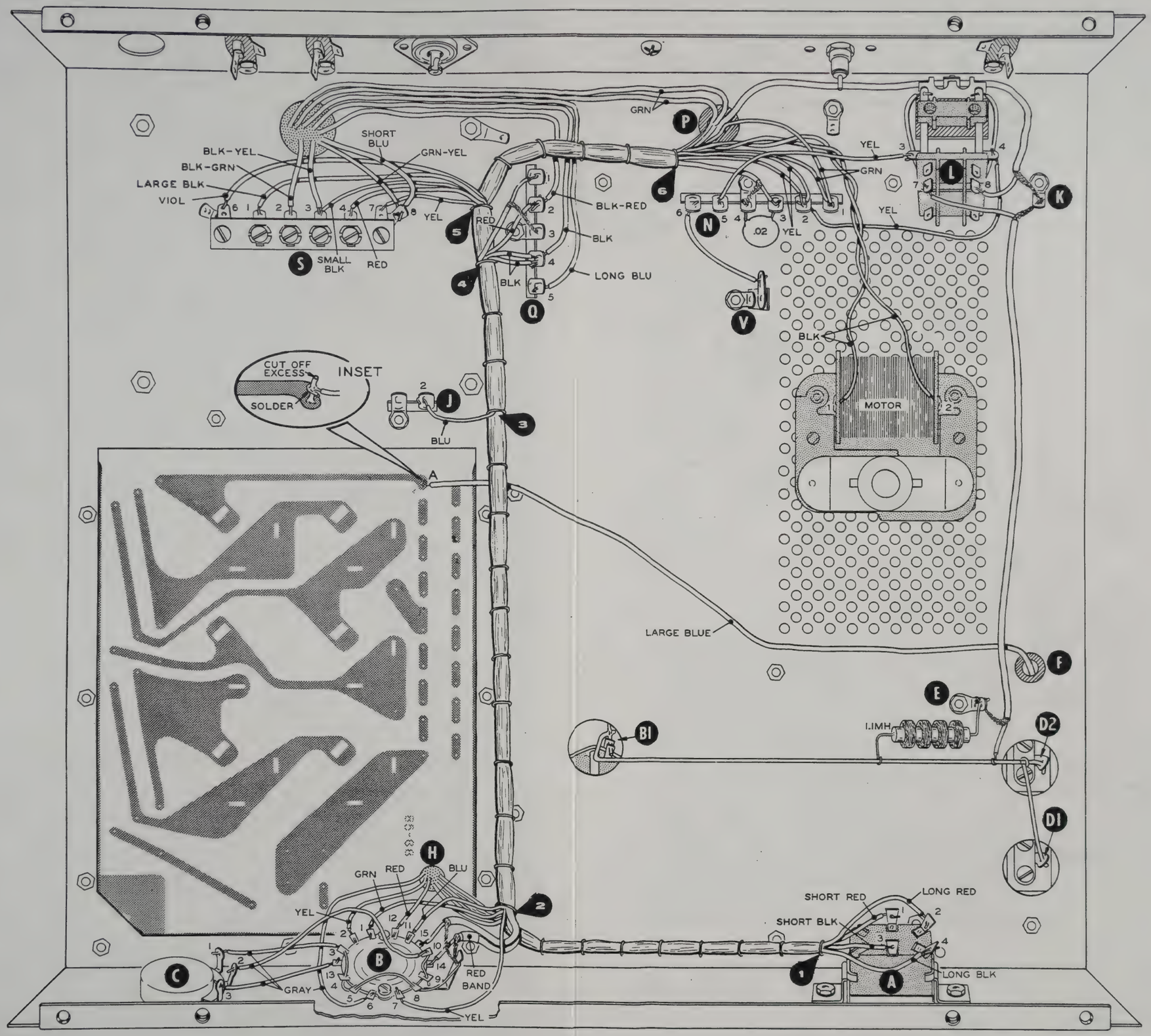
GRN
P
SHORT BLU
BLK-YEL
GRN-YEL
BLK-GRN
LARGE BLK
VIOL
YEL
S
SMALL BLK
RED
5
RED
BLK-RED
BLK
BLK
LONG BLU
4
Q
6
N
.02
YEL
YEL
GRN
YEL
L
K
V
BLK
MOTOR
CUT OFF EXCESS
INSET
SOLDER
J
BLU
3
A
LARGE BLUE
F
E
1.1MH
BI
D2
D1
H
GRN
RED
BLU
YEL
2
C
B
GRAY
RED BAND
YEL
SHORT RED
LONG RED
SHORT BLK
1
A
LONG BLK

PICTORIAL 6

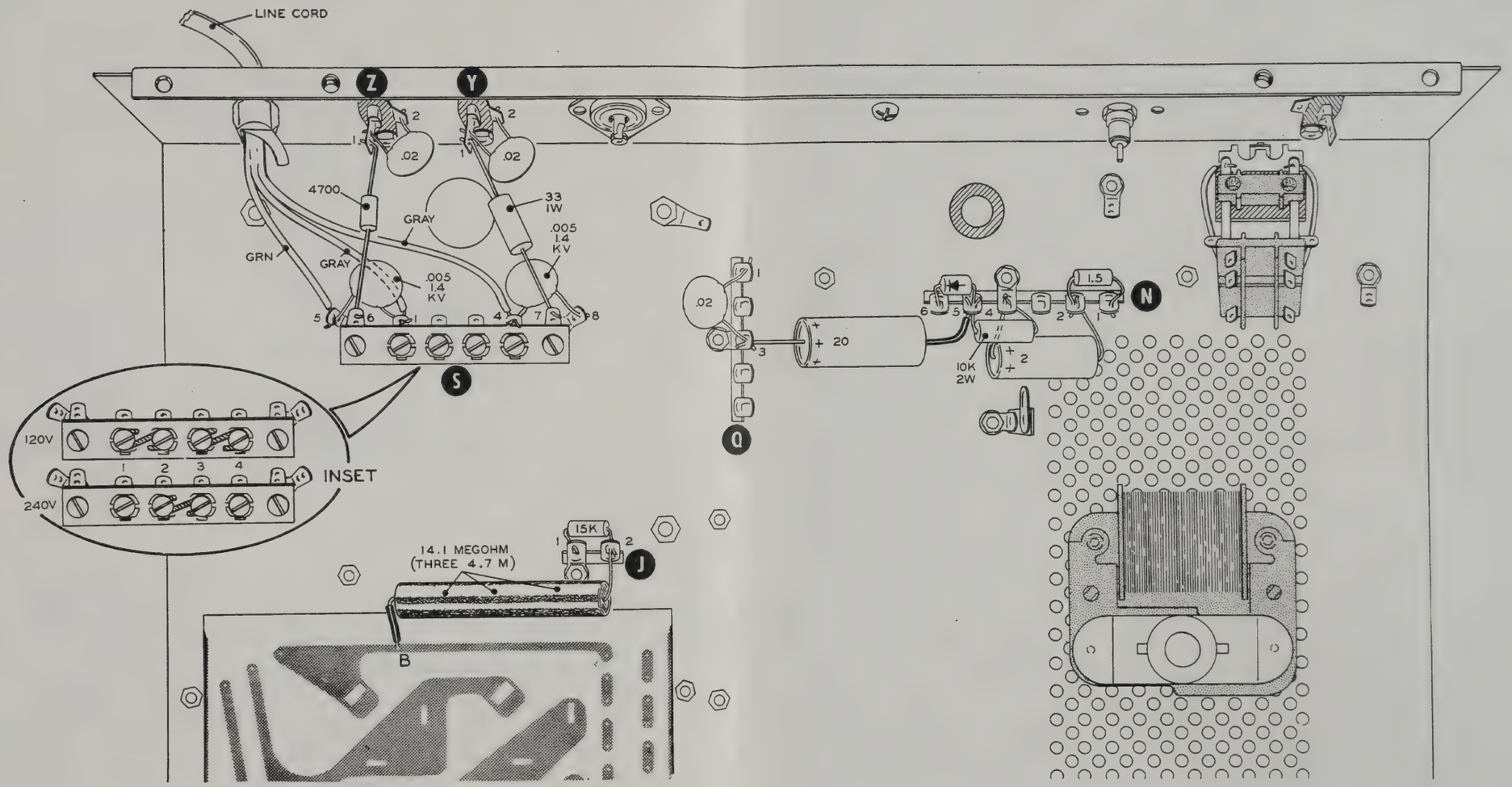
LINE CORD
Z
Y
2
1
.02
.02
4700
33
1W
GRAY
.005
1.4
KV
GRN
GRAY
.005
1.4
KV
5
6
1
4
7
8
S
120V
240V
1
2
3
4
INSET
.02
1
3
+ 20
Q
1.5
N
6
5
4
2
1
10K
2W
+ 2
14.1 MEGOHM
(THREE 4.7 M)
15K
1
2
J
B

PICTORIAL 7

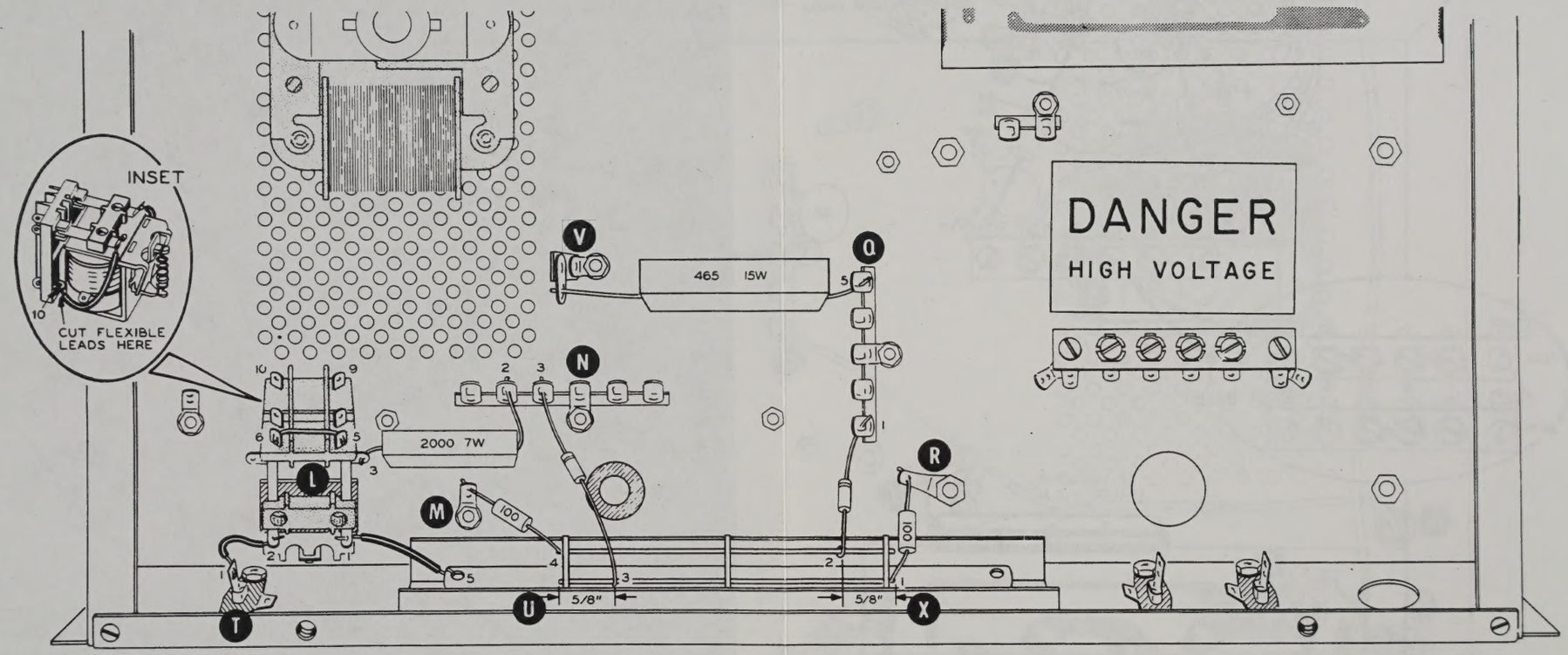
INSET
CUT FLEXIBLE LEADS HERE
DANGER
HIGH VOLTAGE
465 15W
2000 7W
100
100
5/8"
5/8"
V
Q
N
L
M
R
T
U
X

PICTORIAL 8

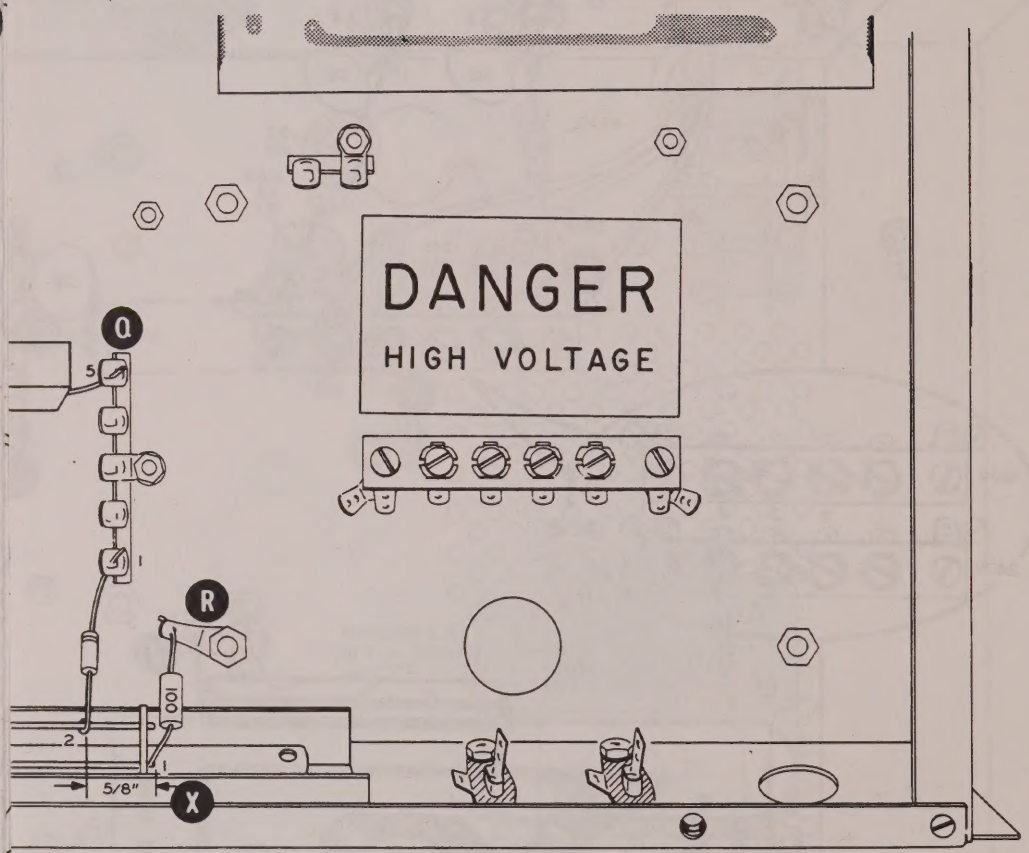

AL 8

CUSTOMER SERVICE

REPLACEMENT PARTS

If you need a replacement part, please fill in the Parts Order Form that is furnished and mail it to the Heath Company. Or, if you write a letter, include the:

- **Part number** and **description** as shown in the **Parts List.**
- Model number and Series number from the blue and white label.
- Date of purchase.
- Nature of the defect.

Please do not return parts to the factory unless they are requested. Parts that are damaged through carelessness or misuse by the kit builder will not be replaced without cost, and will not be considered in warranty.

Parts are also available at the Heathkit Electronic Centers listed in your catalog. Be sure to provide the Heath part number. Bring in the original part when you request a warranty replacement from a Heathkit Electronic Center.

NOTE: Replacement parts are maintained specifically to repair Heathkit products. Parts sales for other reasons will be declined.

TECHNICAL CONSULTATION

Need help with your Heathkit? . . . . Self-Service? . . . . Construction? . . . . Operation? . . . . Call or write for assistance. You'll find our Technical Consultants eager to help with just about any technical problem except "customizing" for unique applications.

The effectiveness of our consultation service depends on the information you furnish. Be sure to tell us:

- The Model number and Series number from the blue and white label.
- The date of purchase.
- An exact description of the difficulty.
- Everything you have done in attempting to correct the problem.

Also include switch positions, connections to other units, operating procedures, voltage readings, and any other information you think might be helpful.

Please do not send parts for testing, unless this is specifically requested by our Consultants.

Hints: Telephone traffic is lightest at midweek. . .please be sure your Manual and notes are on hand when you call.

Heathkit Electronic Center facilities are also available for telephone or "walk-in" personal assistance.

REPAIR SERVICE

Service facilities are available, if they are needed, to repair your completed kit. (Kits that have been modified, soldered with paste flux or acid core solder, cannot be accepted for repair.)

If it is convenient, personally deliver your kit to a Heathkit Electronic Center. For warranty parts replacement, supply a copy of the invoice or sales slip.

If you prefer to ship your kit to the factory, attach a letter containing the following information directly to the unit:

- Your name and address.
- Date of purchase.
- Copies of all correspondence relevant to the service of the kit.
- A brief description of the difficulty.
- Authorization to return your kit C.O.D. for the service and shipping charges. (This will reduce the possibility of delay.)

Check the equipment to see that all screws and parts are secured. (Do not include any wooden cabinets or color television picture tubes, as these are easily damaged in shipment.) Place the equipment in a strong carton with at least THREE INCHES of *resilient* packing material (shredded paper, excelsior, etc.) on all sides. Use additional packing material where there are protrusions (control sticks, large knobs, etc.). If the unit weighs over 15 lbs., place this carton in another one with 3/4" of packing material between the two.

Seal the carton with reinforced gummed tape, tie it with a strong cord, and mark it "Fragile" on at least two sides. Remember, the carrier will not accept liability for shipping damage if the unit is insufficiently packed. Ship by prepaid express, United Parcel Service, or insured Parcel Post to:

Heath Company
Service Department
Benton Harbor, Michigan 49022

HEATH

Schlumberger

HEATH COMPANY • BENTON HARBOR, MICHIGAN

THE WORLD'S FINEST ELECTRONIC EQUIPMENT IN KIT FORM

LITHO IN U.S.A.